YAMAHA

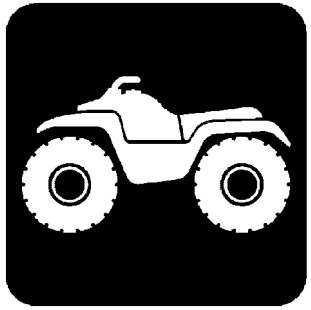

PARTS CATALOGUE

YFM70RSBK (2LSL) U.S.A.

YAMAHA GENUINE Parts & Accessories

1U2LS-110E1

( )

YFM70RSBK
PARTS CATALOGUE
©2018 by Yamaha Motor Co., Ltd.
1st edition, April 2018
All rights reserved.
Any reprinting or unauthorized use
without the written permission of
Yamaha Motor Co., Ltd.
is expressly prohibited.
Printed in Japan.

FOREWORD

This Parts Catalogue is related to the parts for the model(s) on the cover page. When you are ordering replacement parts, please refer to this Parts Catalogue and quote both part numbers and part names correctly.

1. Modifications or additions which have been made after the issue of the Parts Catalogue will be announced in the Parts News.
   It is advisable that you make the necessary corrections to the Parts Catalogue according to the Parts News.

2. Abbreviations
   The following abbreviations are used in this Parts Catalogue.

   "UR" Use specified parts number.

   "UN" Use as many as needed.

   "AP" Alternate Parts

   "LM" Locally Made (Parts need to be ordered locally)

   "F#" Frame No. (Applicable machine No.)

   "O/S" Over Size

3. The number of components for assembly
   - Parts, which are to be supplied in an assembly, are listed with a dot (.) in front of the part name as shown below.
   - The numeral appearing to the right of each component part indicates the quantity of parts for each assembly unit.

PART NO.	DESCRIPTION	Q'TY	REMARKS
2F5–83310–60	FRONT FLASHER LIGHT ASSY	2	
115–83311–60	.BULB (6V–18W)	1	

4. Applicable colours of graphics are represented in the "REMARKS" as shown below.

PART NO.	DESCRIPTION	Q'TY	REMARKS
2N4–24110–00–X5	FUEL TANK COMP.	2	MXR
3J1–24240–10	.GRAPHIC, FUEL TANK	1	FOR MXR

5. Note that the illustrations for reference in finding parts numbers are not to be used for assembling. When assembling, please use the applicable service manual.

6. The asterisk (*) before a reference number indicates modified items after the first edition.

7. Applicable Serial No.

Engine Serial No.

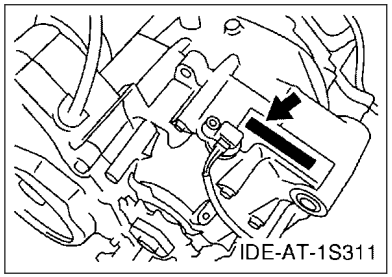

Frame Serial No.

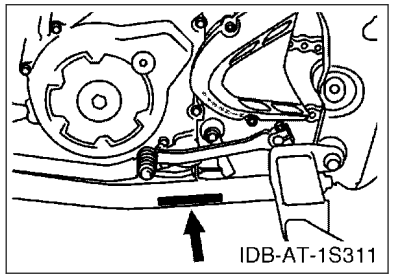

8. Applicable Colour Code (The (*) mark shows Model colour.)

Abbreviation	Colour Name	Colour Code
DNSR(*)	DARK GRAY SOLID R	1653

9. Quantity Column Information

Column No.	Name Of Q’ty Column	Destination
1	2LSL	U.S.A.

MODEL LABEL

(1) A label called “Model Label” is affixed in the location as indicated in (3) below. When using this parts catalogue, please be sure to cross–reference the “model code – production code No.” in the catalogue with the “model code – production code No.” indicated on the Model Label affixed onto the product concerned.

(2) “Model Label” Indication

a b ○ xxxx – xxx ● x c	a: Model Type Code b: Production Code No. c: Colouring Type	○ 4TW1–010 ● A

(3) Model Label Affixing Location

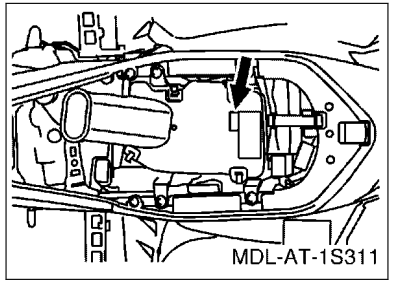

(4) Colouring Information

Model Code	Colouring Type Code	Colour Code	Colour Name	Abbreviation
2LSL	G	1653	DARK GRAY SOLID R	DNSR

(5) Model Code – Production Code Number of Model Listed in This Parts Catalogue

Model Code	Production Code No.	Country (destination)	Model Code	Production Code No.	Country (destination)
2LSL	010	U.S.A.			

CONTENTS

ENGINE

CYLINDER HEAD....1
CYLINDER....2
CRANKSHAFT & PISTON....3
VALVE....4
CAMSHAFT & CHAIN....5
WATER PUMP....6
RADIATOR & HOSE....7
OIL PUMP....8
INTAKE....10
THROTTLE BODY ASSY 1....12
EXHAUST....13
CRANKCASE....14
CRANKCASE COVER 1....15
STARTER....16
CLUTCH....17
TRANSMISSION....19
SHIFT CAM & FORK....21

CHASSIS

FRAME....23
FRONT FENDER....25
REAR FENDER....26
OIL TANK....28
REAR ARM....29
REAR SUSPENSION....32
STEERING....33
FRONT SUSPENSION & WHEEL....34
FUEL TANK....36
SEAT....38
FRONT WHEEL....39
FRONT BRAKE CALIPER....40
REAR WHEEL....42
REAR BRAKE CALIPER....43
STEERING HANDLE & CABLE....44
FRONT MASTER CYLINDER....46
STAND & FOOTREST....47
REAR MASTER CYLINDER....48
GUARD....50
GENERATOR....51
STARTING MOTOR....52
HEADLIGHT....53
TAILLIGHT....54
HANDLE SWITCH & LEVER....55
ELECTRICAL 1....56
ELECTRICAL 2....59
GRAPHICS....60
EMBLEM & LABEL 1....61

INDEX

NUMERICAL INDEX....62

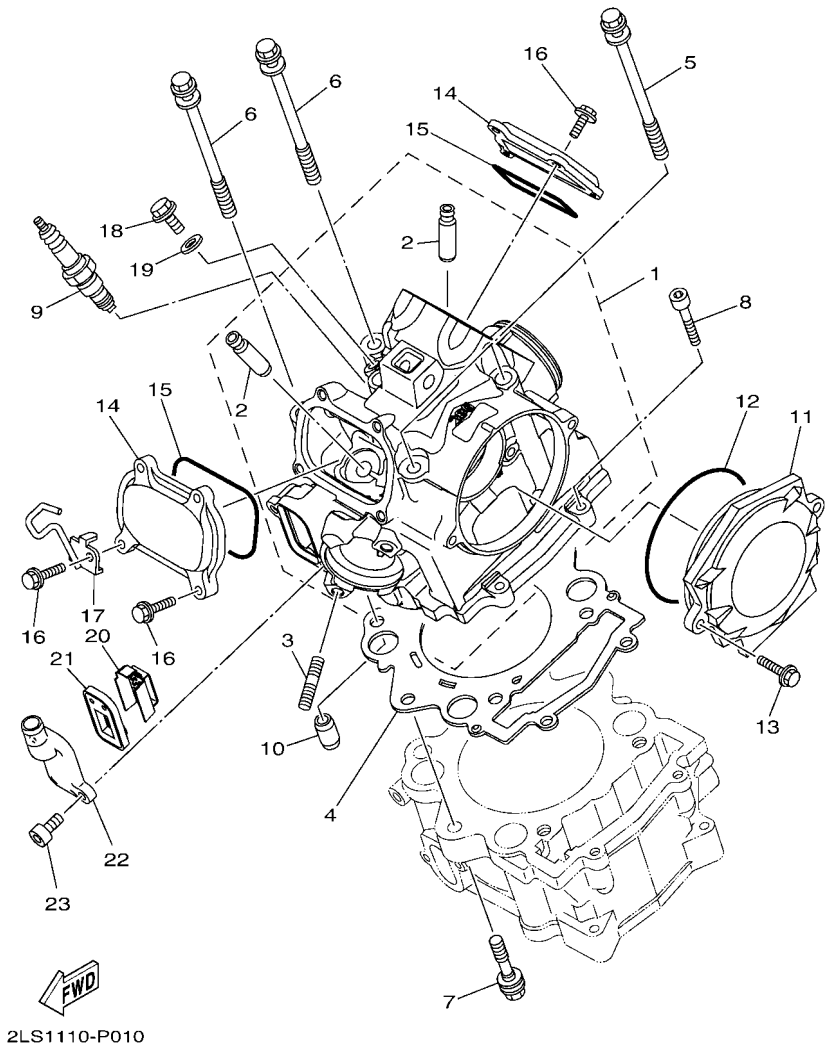

FIG. 1 CYLINDER HEAD

REF. NO.	PART NO.	DESCRIPTION	2LSL					REMARKS
1	2LS–11101–09	CYLINDER HEAD ASSY	1					
2	4G0–11133–11	.GUIDE, VALVE 1	4					
3	95612–08625	BOLT, STUD	2					
4	3B4–11181–00	GASKET, CYLINDER HEAD 1	1					
5	90109–09003	BOLT	2					
6	90109–09002	BOLT	2					
7	90109–09005	BOLT	2					
8	91312–06030	BOLT, HEXAGON SOCKET HEAD	2					
9	94701–00330	PLUG, SPARK (NGK CR8E)	1					
10	93612–16254	PIN, DOWEL	2					
11	1S3–11185–10	COVER, CYLINDER HEAD SIDE 3	1					
12	93210–96601	O-RING	1					
13	95022–06020	BOLT, FLANGE	2					
14	1S3–11186–00	COVER, CYLINDER HEAD SIDE 2	2					
15	93210–78544	O-RING	2					
16	95022–06020	BOLT, FLANGE	8					
17	1S3–1131E–00	HOLDER 1	1					
18	90401–08004	BOLT, UNION	1					
19	90430–08119	GASKET	1					
20	2BG–1482K–00	PLATE	1					
21	5JW–14890–00	REED VALVE ASSY	1					
22	5JW–14889–00	CAP, CASE	1					
23	90110–06175	BOLT, HEXAGON SOCKET HEAD	2					

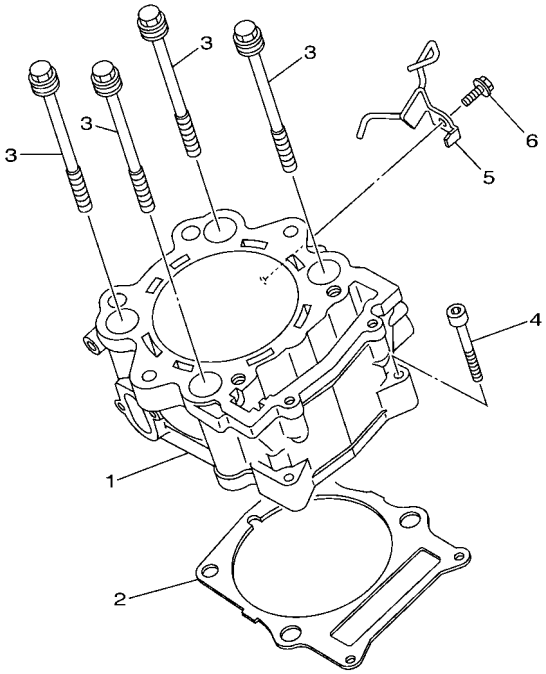

1S31100-E020

FIG. 2 CYLINDER

REF. NO.	PART NO.	DESCRIPTION	2LSL					REMARKS
1	1S3–11310–01	CYLINDER	1					
2	1S3–11351–00	GASKET, CYLINDER	1					
3	90119–10023	BOLT, WITH WASHER	4					
4	91312–06040	BOLT, HEXAGON SOCKET HEAD	2					
5	1S3–11395–00	HOLDER	1					
6	95822–06012	BOLT, FLANGE	1					

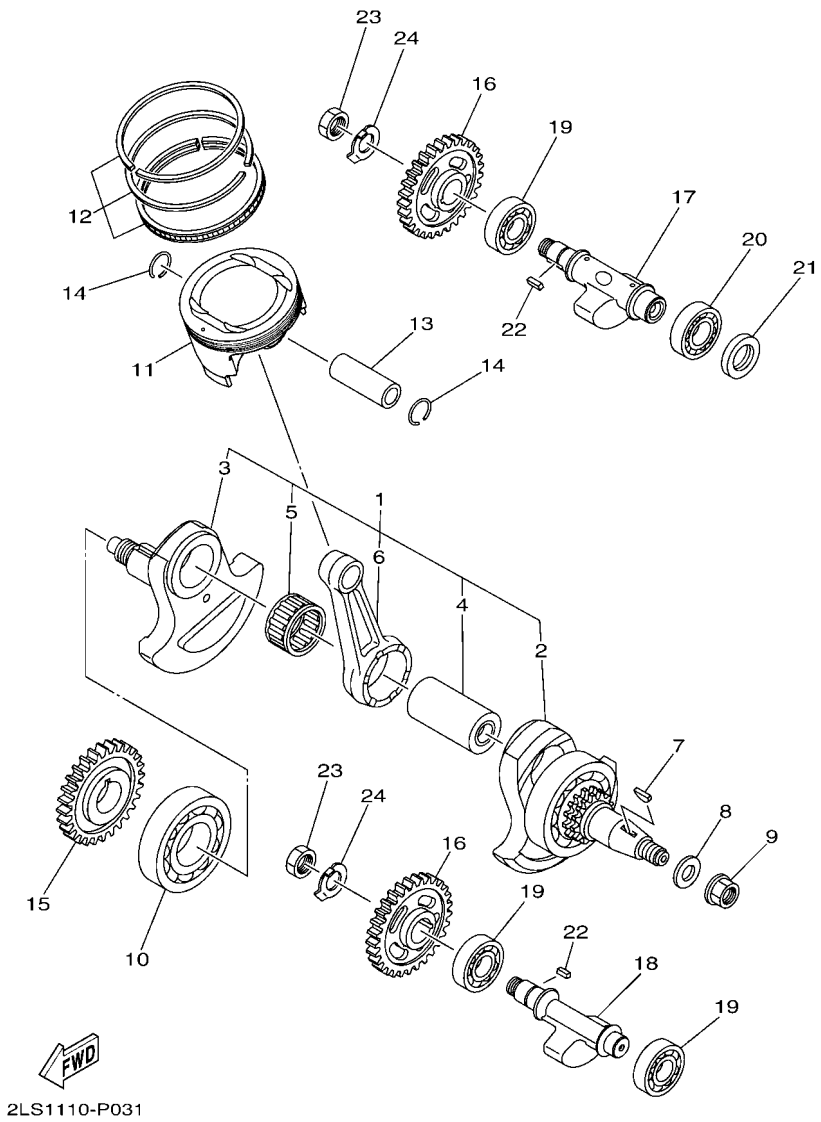

FIG. 3 CRANKSHAFT & PISTON

REF. NO.	PART NO.	DESCRIPTION	2LSL					REMARKS
1	2LS–11400–00	CRANKSHAFT ASSY	1					
2	1S3–11401–09	.CRANK SUB ASSY 1	1					
3	1S3–11422–00	.CRANK 2	1					
4	1S3–11681–00	.PIN, CRANK 1	1					
5	93310–84037	.BEARING	1					
6	2BG–11651–00	.ROD, CONNECTING	1					
7	90280–05001	KEY, WOODRUFF	1					
8	90201–16013	WASHER, PLATE	1					
9	90179–16004	NUT	1					
10	93306–30810	BEARING	1					
11	2BG–11631–00	PISTON (STD)	1					
12	1S3–11603–10	PISTON RING SET (STD)	1					
13	5VK–11633–00	PIN, PISTON	1					
14	93450–24154	CIRCLIP	2					
15	1S3–11536–10	GEAR, DRIVE	1					
16	1S3–11531–10	GEAR, BALANCE WEIGHT	2					
17	2LS–11454–00	WEIGHT 1	1					
18	2LS–11464–00	WEIGHT 2	1					
19	93306–20481	BEARING	3					
20	93306–00502	BEARING	1					
21	93101–25106	OIL SEAL	1					
22	90282–05005	KEY, STRAIGHT	2					
23	90170–16326	NUT	2					
24	90215–16221	WASHER, LOCK	2					

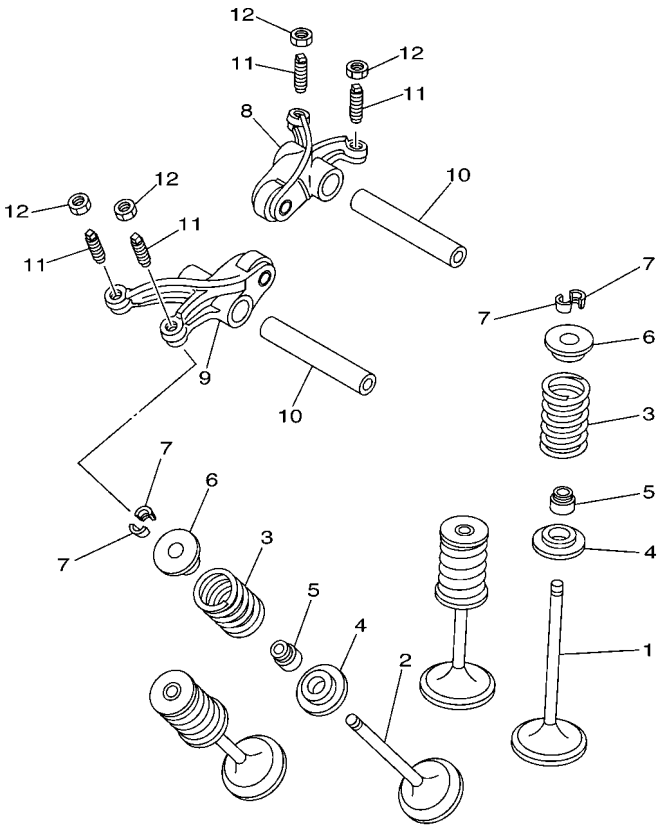

1S31100-E040

FIG. 4 VALVE

REF. NO.	PART NO.	DESCRIPTION	2LSL					REMARKS
1	5VK–12111–00	VALVE, INTAKE	2					
2	5VK–12121–00	VALVE, EXHAUST	2					
3	1S3–12113–00	SPRING, VALVE INNER	4					
4	1PE–12116–00	SEAT, VALVE SPRING	4					
5	5H0–12119–00	SEAL, VALVE STEM	4					
6	3YF–12117–01	RETAINER, VALVE SPRING	4					
7	4G0–12118–00	COTTER, VALVE	8					
8	5VK–12151–00	ARM, VALVE ROCKER	1					
9	5VK–12161–00	ARM, VALVE ROCKER 2	1					
10	5VK–12146–00	SHAFT, ROCKER	2					
11	5XT–12159–00	SCREW, VALVE ADJUSTING	4					
12	90170–06128	NUT	4					

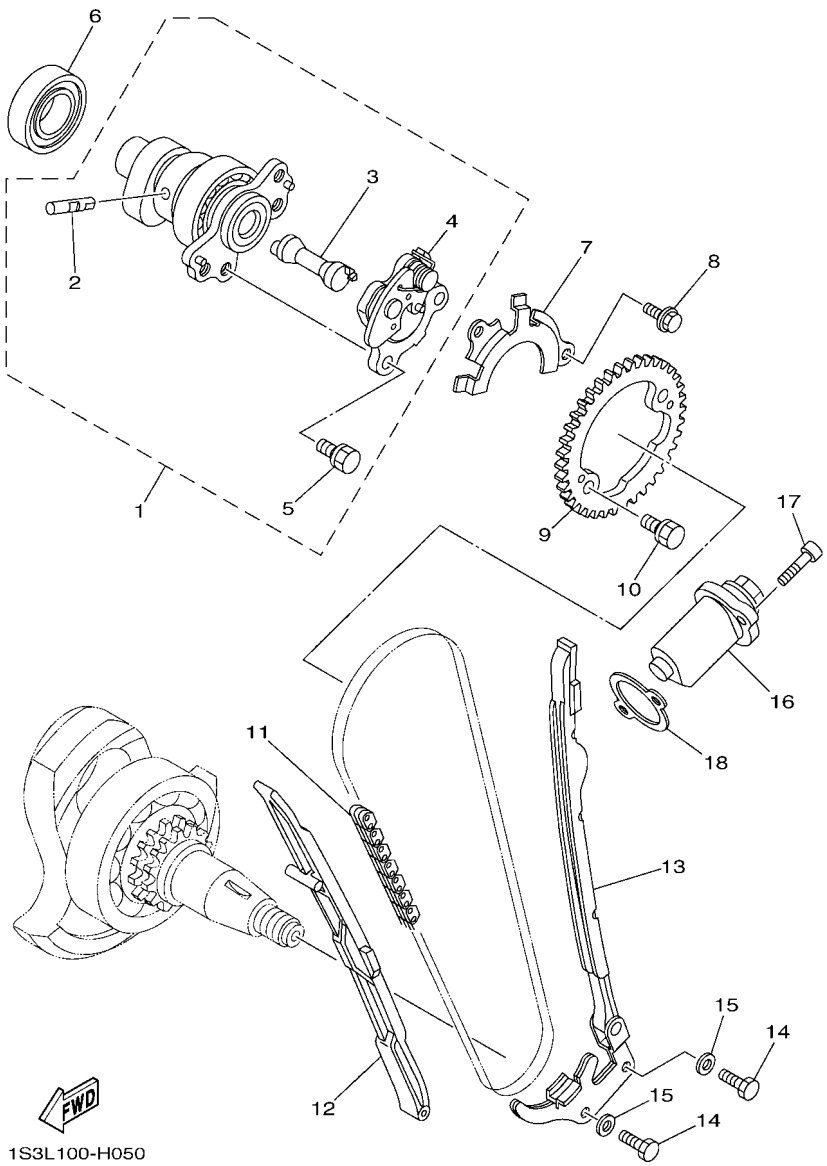

FIG. 5 CAMSHAFT & CHAIN

REF. NO.	PART NO.	DESCRIPTION	2LSL					REMARKS
1	2LS–12170–00	CAMSHAFT ASSY 1	1					
2	5VK–12284–00	.PIN, DECOMPRESSION LEVER	1					
3	1S3–12290–00	.LEVER, DECOMPRESSION SPRING	1					
4	1S3–12280–01	.DECOMPRESSION ASSY	1					
5	90105–07006	.BOLT, FLANGE	2					
6	93306–07209	BEARING	1					
7	5VK–1111F–00	PLATE	1					
8	90105–06078	BOLT, FLANGE	2					
9	1S3–12176–00	SPROCKET, CAM CHAIN	1					
10	90105–07006	BOLT, FLANGE	2					
11	94591–57126	CHAIN (98XRH2010-126M)	1					
12	5VK–12231–00	GUIDE, STOPPER 1	1					
13	1S3–12241–00	GUIDE, STOPPER 2	1					
14	97022–06016	BOLT, HEXAGON	2					
15	92902–06600	WASHER, PLATE	2					
16	3TB–12210–00	TENSIONER ASSY, CAM CHAIN	1					
17	91312–06025	BOLT, HEXAGON SOCKET HEAD	2					
18	4DW–12213–00	GASKET, TENSIONER CASE	1					

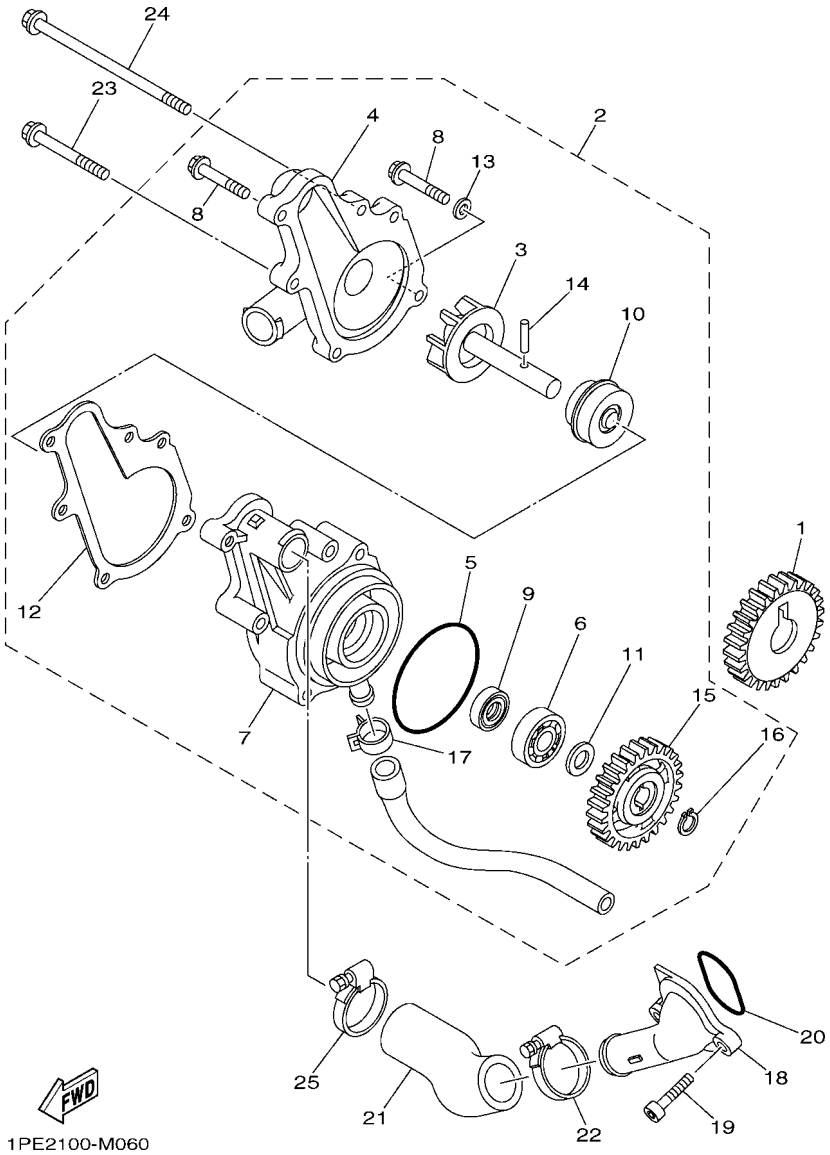

FIG. 6 WATER PUMP

REF. NO.	PART NO.	DESCRIPTION	2LSL					REMARKS
1	1S3–12436–00	GEAR, DRIVE	1					
2	1S3–12420–00	WATER PUMP ASSY	1					
3	1S3–12450–00	.IMPELLER SHAFT ASSY	1					
4	1S3–12422–00	.COVER, HOUSING	1					
5	93210–61750	.O-RING	1					
6	93306–00106	.BEARING	1					
7	1S3–12421–00	.HOUSING, WATER PUMP	1					
8	95022–06025	.BOLT, FLANGE	3					
9	93101–12173	.OIL SEAL	1					
10	4C8–12438–00	.SEAL, MECHANICAL	1					
11	90201–12541	.WASHER, PLATE	1					
12	1S3–12428–00	.GASKET, HOUSING COVER 2	1					
13	90430–06014	.GASKET	1					
14	93603–16219	.PIN, DOWEL	1					
15	5VK–12459–00	.GEAR, IMPELLER SHAFT	1					
16	99009–12400	.CIRCLIP	1					
17	90467–13062	.CLIP	1					
18	1S3–12469–00	JOINT 1	1					
19	91312–06020	BOLT, HEXAGON SOCKET HEAD	2					
20	93210–33786	O-RING	1					
21	1S3–12577–00	HOSE 2	1					
22	90450–32015	HOSE CLAMP ASSY	1					
23	95022–06050	BOLT, FLANGE	2					
24	95022–06110	BOLT, FLANGE	1					
25	90450–32015	HOSE CLAMP ASSY	1					

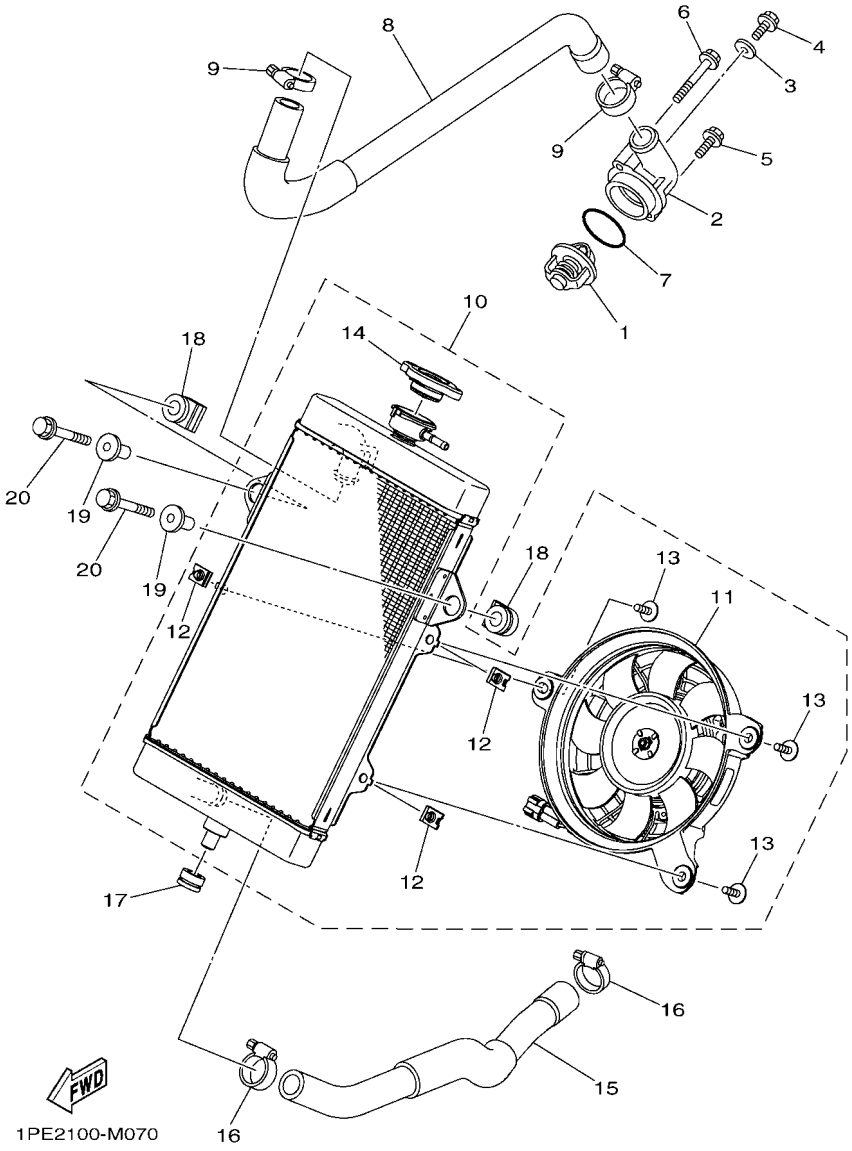

FIG. 7 RADIATOR & HOSE

REF. NO.	PART NO.	DESCRIPTION	2LSL					REMARKS
1	5VK–12410–00	THERMOSTAT ASSY	1					
2	1S3–12413–00	COVER, THERMOSTAT	1					
3	90430–06014	GASKET	1					
4	95022–06010	BOLT, FLANGE	1					
5	95022–06020	BOLT, FLANGE	1					
6	95022–06045	BOLT, FLANGE	1					
7	93210–41042	O-RING	1					
8	1PE–E2578–00	HOSE 3	1					
9	90467–26189	CLIP	2					
10	1PE–E2460–01	RADIATOR ASSY	1					
11	1PE–E2405–00	.BLOWER ASSY	1					
12	1PE–E2535–00	.PLATE	3					
13	1PE–E2675–00	.BOLT, BLOWER HOLDING	3					
14	1XD–E2462–00	.CAP, RADIATOR	1					
15	1PE–E2579–00	HOSE 4	1					
16	90450–32015	HOSE CLAMP ASSY	2					
17	90480–18330	GROMMET	1					
18	1S3–12465–00	DAMPER, RADIATOR	2					
19	90387–06166	COLLAR	2					
20	95802–06030	BOLT, FLANGE	2					

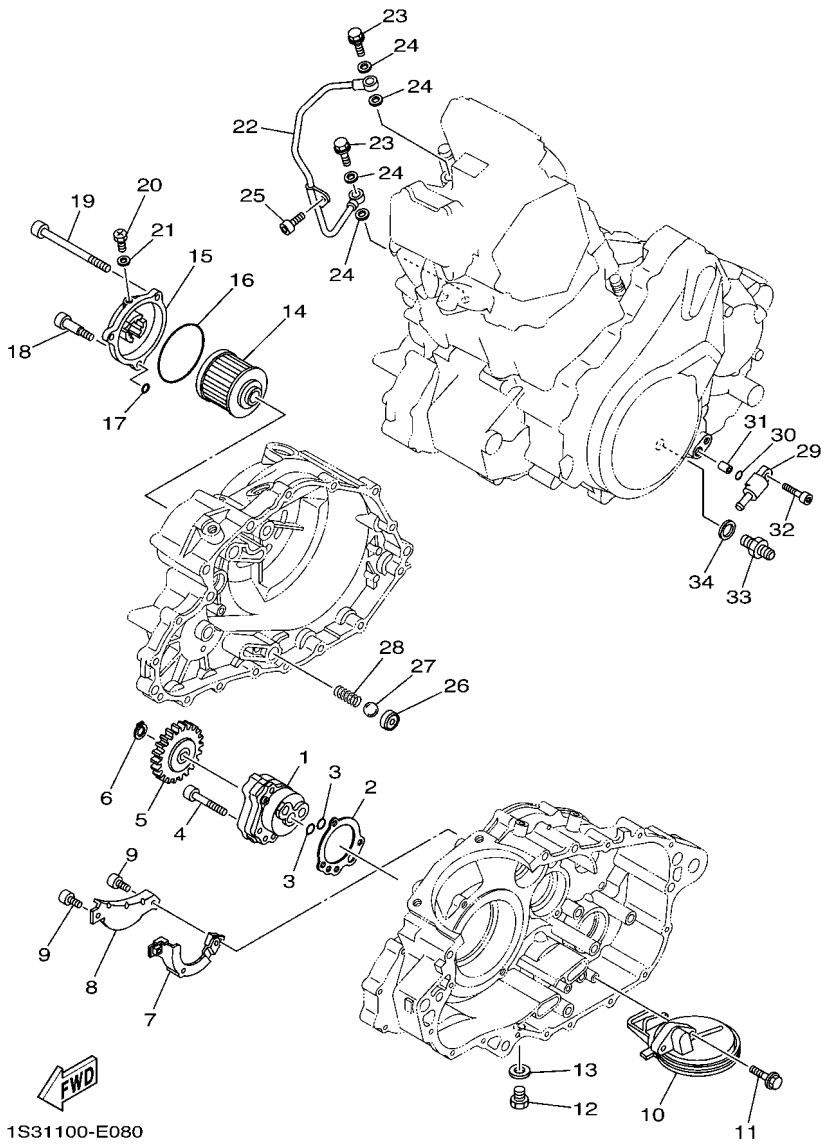

FIG. 8 OIL PUMP

REF. NO.	PART NO.	DESCRIPTION	2LSL					REMARKS
1	5LP–13300–00	OIL PUMP ASSY	1					
2	5LP–13329–00	GASKET, PUMP COVER	1					
3	93210–13361	O-RING	2					
4	91312–06035	BOLT, HEXAGON SOCKET HEAD	3					
5	3AJ–13325–00	GEAR, PUMP DRIVEN	1					
6	99009–11400	CIRCLIP	1					
7	1S3–13356–00	COVER, PUMP 2	1					
8	1S3–13327–00	COVER, PUMP GEAR	1					
9	90110–05030	BOLT, HEXAGON SOCKET HEAD	2					
10	1S3–13410–00	STRAINER HOUSING ASSY	1					
11	90105–06082	BOLT, FLANGE	2					
12	90340–14029	PLUG, STRAIGHT SCREW	1					
13	214–11198–01	GASKET	1					
14	4X7–13440–01	ELEMENT ASSY, OIL CLEANER	1					
15	1S3–13447–00	COVER, OIL ELEMENT	1					
16	93210–64297	O-RING	1					
17	93210–07135	O-RING	1					
18	90109–06169	BOLT	1					
19	91312–06095	BOLT, HEXAGON SOCKET HEAD	2					
20	90149–05018	SCREW	1					
21	90430–05126	GASKET	1					
22	1S3–13171–00	PIPE, DELIVERY 2	1					
23	90401–10024	BOLT, UNION	2					
24	90430–10188	GASKET	4					
25	91312–06012	BOLT, HEXAGON SOCKET HEAD	1					
26	583–13113–00	SEAT, CHECK BALL	1					
27	93503–08007	BALL	1					

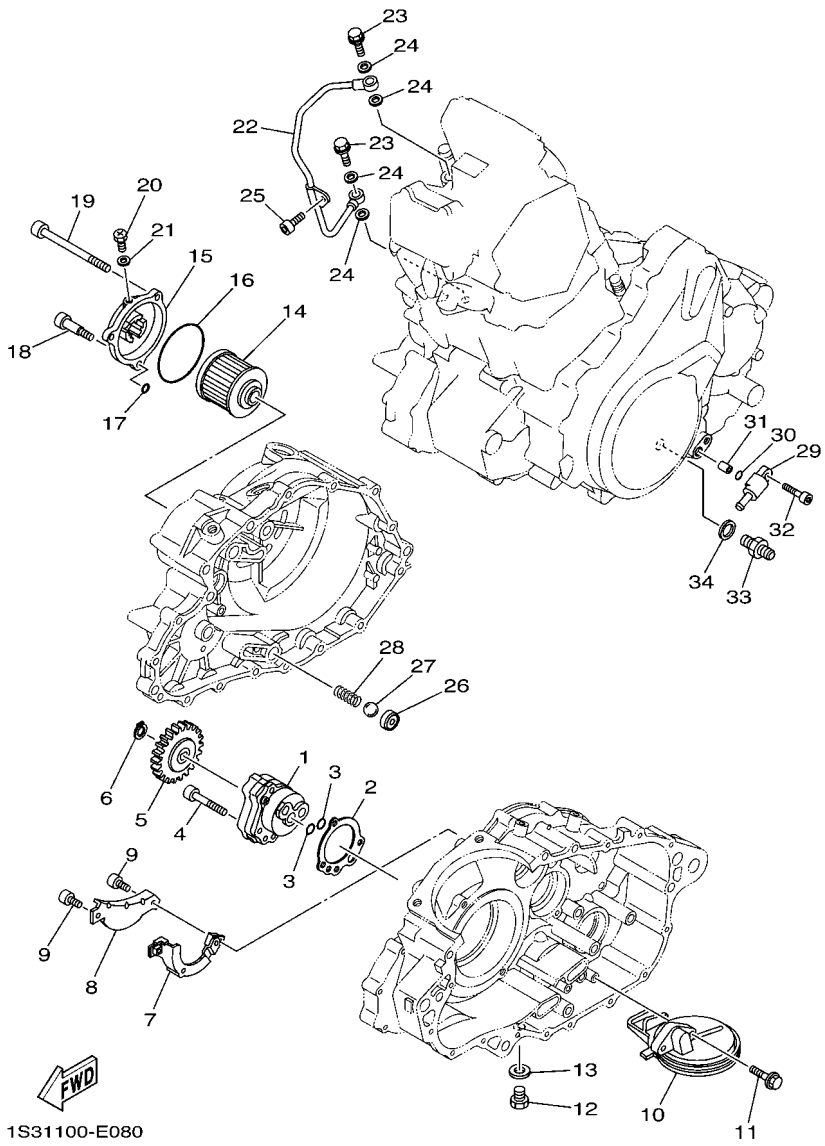

FIG. 8 OIL PUMP

REF. NO.	PART NO.	DESCRIPTION	2LSL					REMARKS
28	90501–043E0	SPRING, COMPRESSION	1					
29	1S3–13416–00	PIPE, OIL 1	1					
30	93210–10197	O-RING	1					
31	99530–10114	PIN, DOWEL	1					
32	95022–06025	BOLT, FLANGE	1					
33	1S3–13132–00	JOINT	1					
34	90430–14043	GASKET	1					

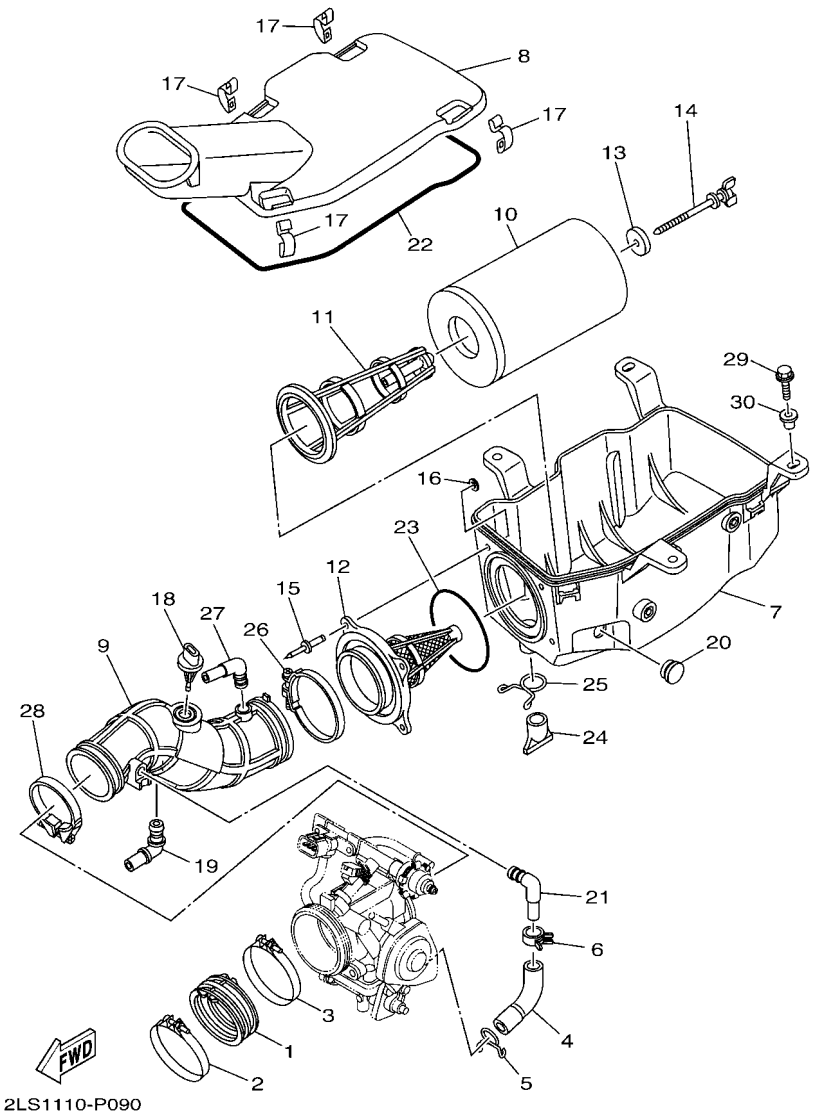

FIG. 9 INTAKE

REF. NO.	PART NO.	DESCRIPTION	2LSL					REMARKS
1	5VK–13586–00	JOINT, CARBURETOR 1	1					
2	90450–72003	HOSE CLAMP ASSY	1					
3	90450–72003	HOSE CLAMP ASSY	1					
4	1PE–E3545–00	HOSE 1	1					
5	90467–160A4	CLIP	1					
6	90467–15012	CLIP	1					
7	1S3–14411–00	CASE, AIR CLEANER 1	1					
8	1S3–14412–01	CAP, CLEANER CASE 1	1					
9	2LS–14453–00	JOINT, AIR CLEANER 1	1					
10	1S3–14451–00	ELEMENT, AIR CLEANER	1					
11	1S3–14458–00	GUIDE	1					
12	1S3–14459–01	HOLDER, GUIDE	1					
13	90209–06096	WASHER	1					
14	90122–06010	BOLT, WING	1					
15	90267–48138	RIVET, BLIND	4					
16	90201–04028	WASHER, PLATE	4					
17	5GH–14436–00	HOOK	4					
18	5VU–85886–00	SENSOR, AIR TEMPRATURE	1					
19	5KM–14419–00	PIPE	1					
20	90338–18266	PLUG	1					
21	31A–14419–00	PIPE	1					
22	10M–14457–00	SEAL	1					
23	1S3–14457–00	SEAL	1					
24	59V–14457–00	SEAL	1					
25	90467–220A1	CLIP	1					
26	90460–75020	CLAMP, HOSE	1					
27	5TJ–14419–00	PIPE	1					

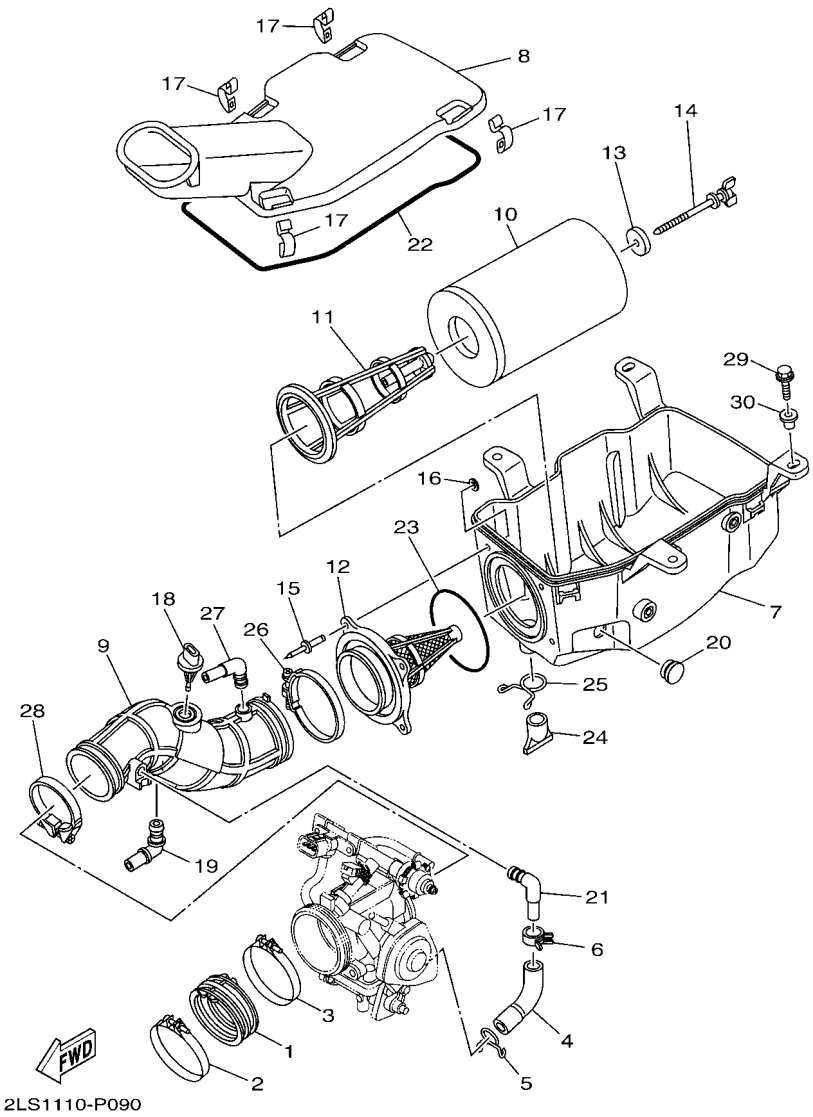

FIG. 9 INTAKE

REF. NO.	PART NO.	DESCRIPTION	2LSL					REMARKS
28	90450–59006	HOSE CLAMP ASSY	1					
29	90105–06084	BOLT, FLANGE	4					
30	90387–08073	COLLAR	4					

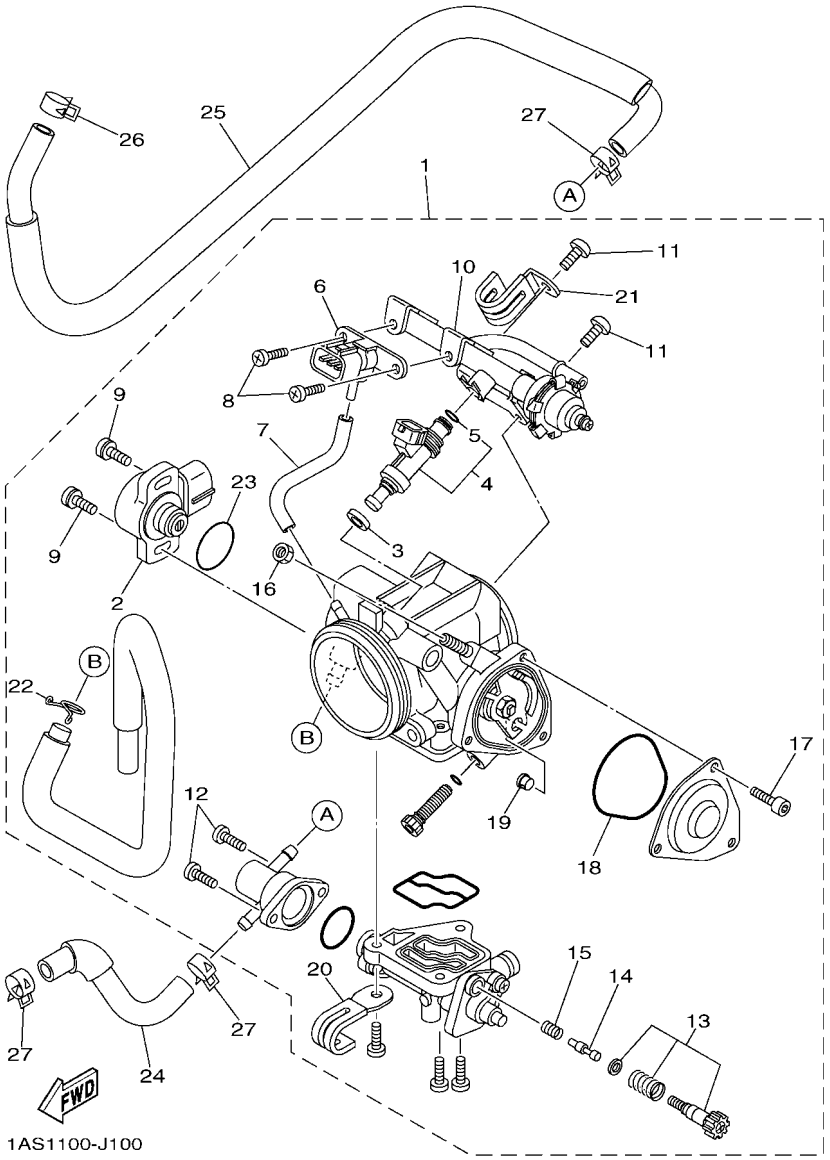

FIG. 10 THROTTLE BODY ASSY 1

REF. NO.	PART NO.	DESCRIPTION	2LSL					REMARKS
1	1S3–13750–10	THROTTLE BODY ASSY	1					
2	8GL–85885–00	.THROTTLE SENSOR ASSY	1					
3	8FP–13556–00	.RUBBER, INJECTOR	1					
4	5VK–13761–00	.INJECTOR	1					
5	5PS–14147–00	..O-RING	1					
6	1C7–82380–00	.SENSOR, PRESSURE	1					
7	5JW–14348–00	.PIPE 1	1					
8	98507–06010	.SCREW, PAN HEAD	2					
9	8CC–14216–10	.SCREW	2					
10	1S3–13160–00	.DELIVERY PIPE ASSY 1	1					
11	98507–06012	.SCREW, PAN HEAD	2					
12	98507–05012	.SCREW, PAN HEAD	2					
13	5VX–14503–00	.ADJUST SCREW SET	1					
14	1S3–13493–00	.PLUNGER	1					
15	4BH–14134–00	.SPRING, AIR ADJUSTING	1					
16	1S3–14161–00	.NUT, CABLE ADJUSTING	1					
17	91312–04006	.BOLT, HEXAGON SOCKET HEAD	3					
18	4WV–14147–10	.O-RING	1					
19	1UY–14155–00	.GUIDE, CABLE	1					
20	3JC–14146–00	.PLATE	1					
21	5JW–14945–00	.PLATE	1					
22	90467–09006	.CLIP	1					
23	5YP–14562–00	.O-RING	1					
24	1PE–E243A–00	HOSE 1	1					
25	1PE–E243E–00	HOSE 2	1					
26	90467–11090	CLIP	1					
27	90467–11090	CLIP	3					

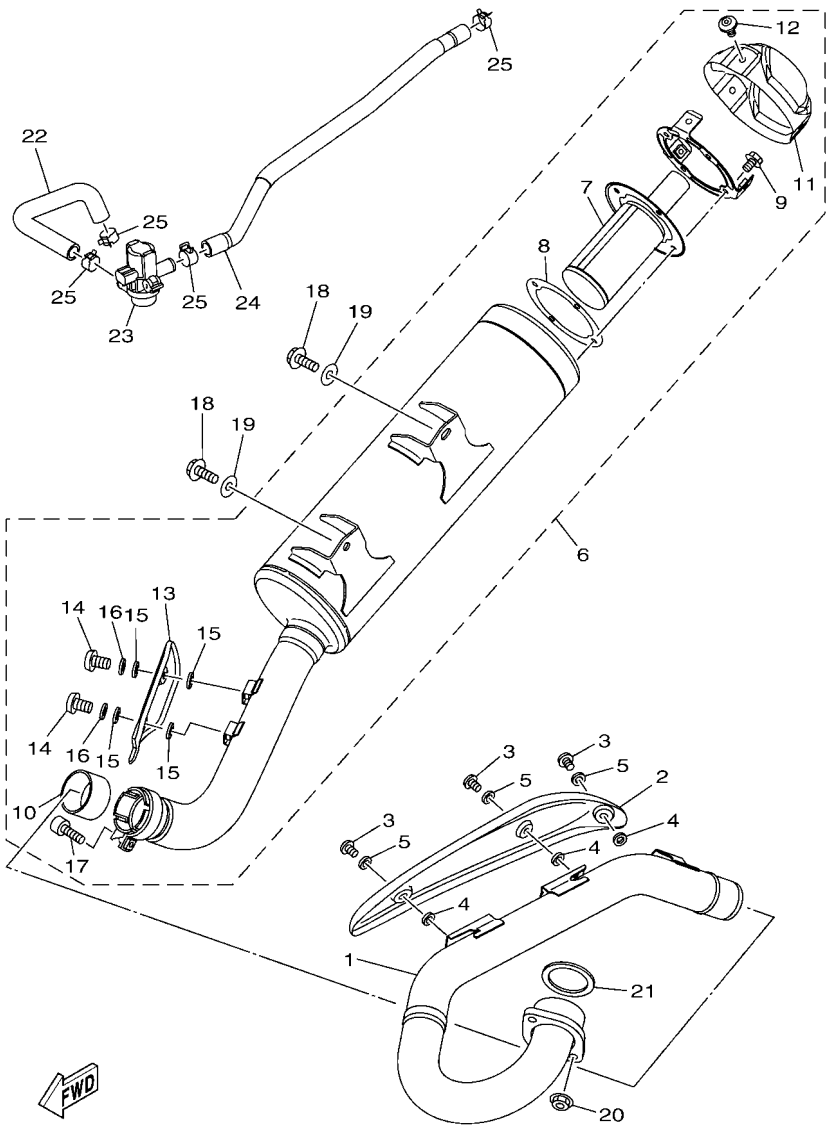

2LS1110-P110

FIG. 11 EXHAUST

REF. NO.	PART NO.	DESCRIPTION	2LSL					REMARKS
1	2LS–E4611–00	PIPE, EXHAUST 1	1					
2	2LS–E4628–00	PROTECTOR, EXHAUST PIPE	1					
3	98980–06010	SCREW, BIND	3					
4	90201–05019	WASHER, PLATE	3					
5	90201–05037	WASHER, PLATE	3					
6	2LS–E4710–00	MUFFLER ASSY 1	1					
7	2LS–E4780–00	.SPARK ARRESTER ASSY	1					
8	2BG–E4755–00	.GASKET, SILENCER	1					
9	95022–06012	.BOLT, FLANGE	4					
10	2LS–E4714–00	.GASKET, MUFFLER	1					
11	1TD–E4787–00	.CAP, SILENCER	1					
12	90149–06298	.SCREW	3					
13	2LS–E4728–00	.PROTECTOR, MUFFLER 2	1					
14	98902–06010	.SCREW, BIND	2					
15	90201–05017	.WASHER, PLATE	4					
16	92902–06200	.WASHER	2					
17	91314–08035	.BOLT, HEXAGON SOCKET HEAD	1					
18	90105–08142	BOLT, FLANGE	2					
19	90201–08048	WASHER, PLATE	2					
20	95702–08500	NUT, FLANGE	2					
21	3EG–14613–00	GASKET, EXHAUST PIPE	1					
22	2LS–E4881–00	HOSE, BEND 1	1					
23	1TD–14840–00	AIR CUT VALVE ASSY	1					
24	2LS–E4882–00	HOSE, BEND 2	1					
25	90467–17089	CLIP	4					

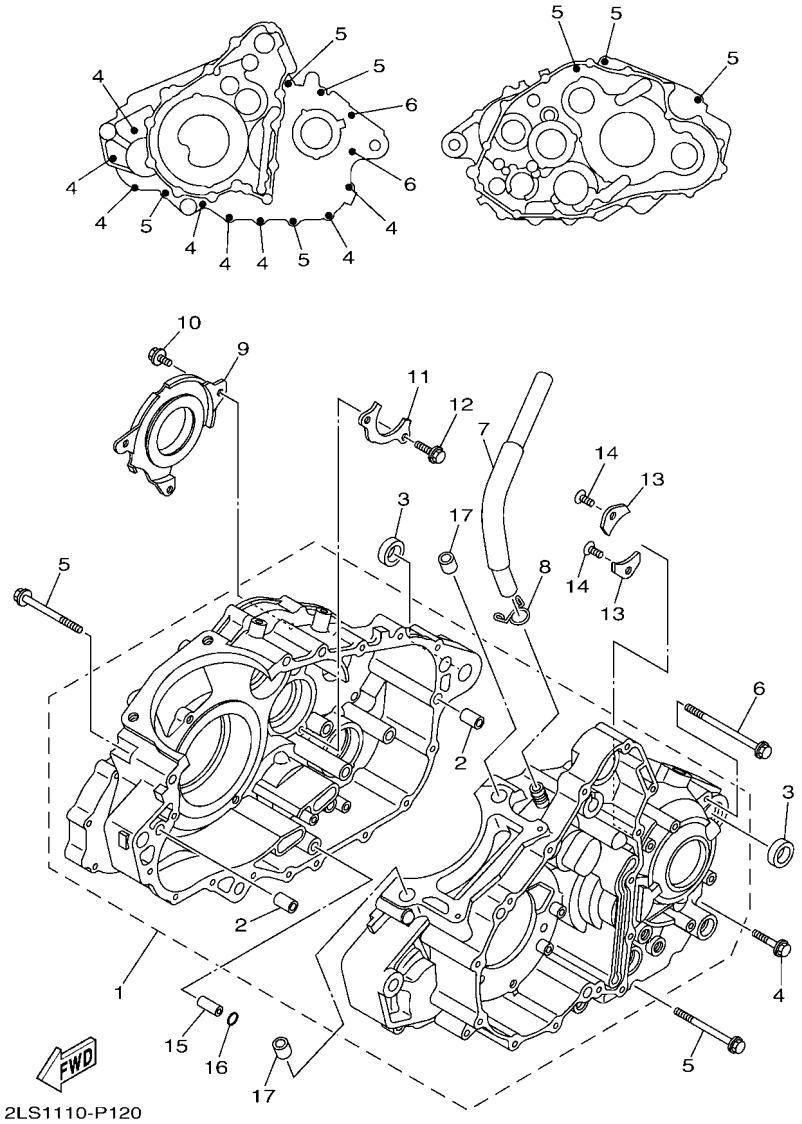

FIG. 12 CRANKCASE

REF. NO.	PART NO.	DESCRIPTION	2LSL					REMARKS
1	1PE–15100–09	CRANKCASE ASSY	1					
2	99530–10114	.PIN, DOWEL	2					
3	90387–17009	COLLAR	2					
4	95022–06030	BOLT, FLANGE	8					
5	95022–06070	BOLT, FLANGE	7					
6	95022–06090	BOLT, FLANGE	2					
7	2LS–E1166–00	PIPE, BREATHER 1	1					
8	90467–140A4	CLIP	1					
9	1S3–11165–00	PLATE, BREATHER	1					
10	90105–06081	BOLT, FLANGE	3					
11	1S3–15383–00	PLATE, BEARING COVER	1					
12	90105–06082	BOLT, FLANGE	2					
13	4JT–15381–01	PLATE, BEARING COVER	2					
14	90149–06074	SCREW	2					
15	99530–08016	PIN, DOWEL	1					
16	93210–07135	O-RING	1					
17	99530–14016	PIN, DOWEL	2					

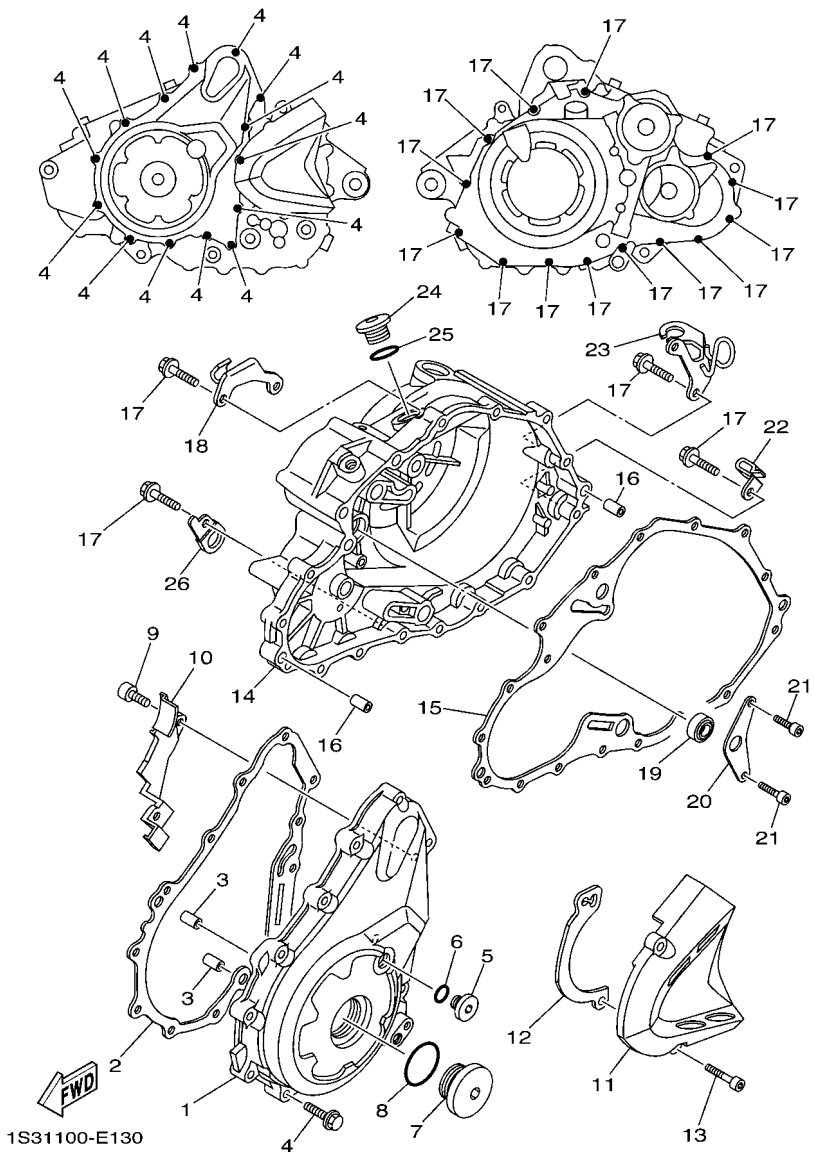

FIG. 13 CRANKCASE COVER 1

REF. NO.	PART NO.	DESCRIPTION	2LSL					REMARKS
1	1S3–15411–00	COVER, CRANKCASE 1	1					
2	1S3–15451–00	GASKET, CRANKCASE COVER 1	1					
3	99530–10114	PIN, DOWEL	2					
4	95022–06030	BOLT, FLANGE	14					
5	90340–14016	PLUG, STRAIGHT SCREW	1					
6	93210–14369	O-RING	1					
7	90340–36004	PLUG, STRAIGHT SCREW	1					
8	93210–357A3	O-RING	1					
9	90110–05031	BOLT, HEXAGON SOCKET HEAD	1					
10	1S3–15113–00	PLATE	1					
11	1S3–15421–00	COVER, CRANKCASE 2	1					
12	1S3–17466–00	GUIDE, CHAIN	1					
13	91312–06025	BOLT, HEXAGON SOCKET HEAD	2					
14	1S3–15431–00	COVER, CRANKCASE 3	1					
15	1S3–15462–00	GASKET, CRANKCASE COVER 3	1					
16	99530–10120	PIN, DOWEL	2					
17	95022–06030	BOLT, FLANGE	14					
18	1S3–15441–00	HOLDER, CLUTCH CABLE	1					
19	93101–14164	OIL SEAL	1					
20	1S3–15118–00	HOLDER	1					
21	90110–06182	BOLT, HEXAGON SOCKET HEAD	2					
22	90461–10011	CLAMP	1					
23	1S3–1546C–00	HOLDER	1					
24	4H7–15189–00	PLUG	1					
25	93210–207A0	O-RING	1					
26	90462–08046	CLAMP	1					

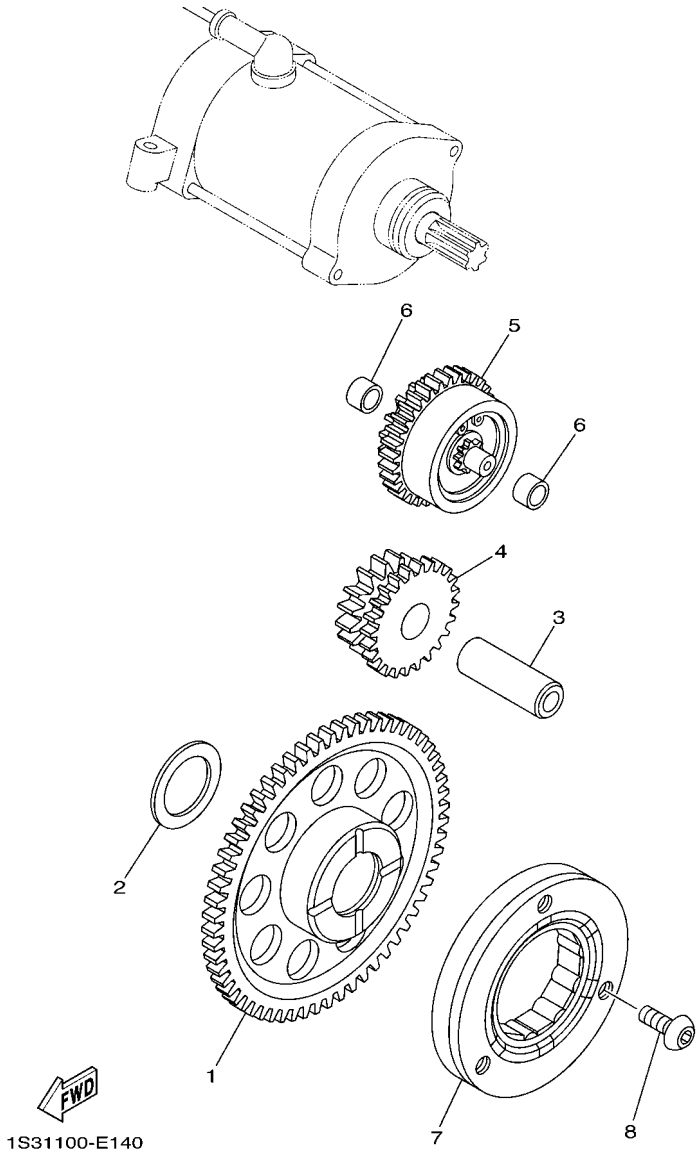

FIG. 14 STARTER

REF. NO.	PART NO.	DESCRIPTION	2LSL					REMARKS
1	1S3–15515–00	GEAR 3	1					
2	90201–286K9	WASHER, PLATE (T1.0)	1					
3	1VJ–15522–00	SHAFT 2	1					
4	1S3–15517–01	GEAR, IDLER 2	1					
5	1PE–15560–00	DAMPER ASSY	1					
6	90380–10002	BUSH, SOLID	2					
7	5VK–15590–00	STARTER ONE-WAY ASSY	1					
8	90149–08049	SCREW	3					

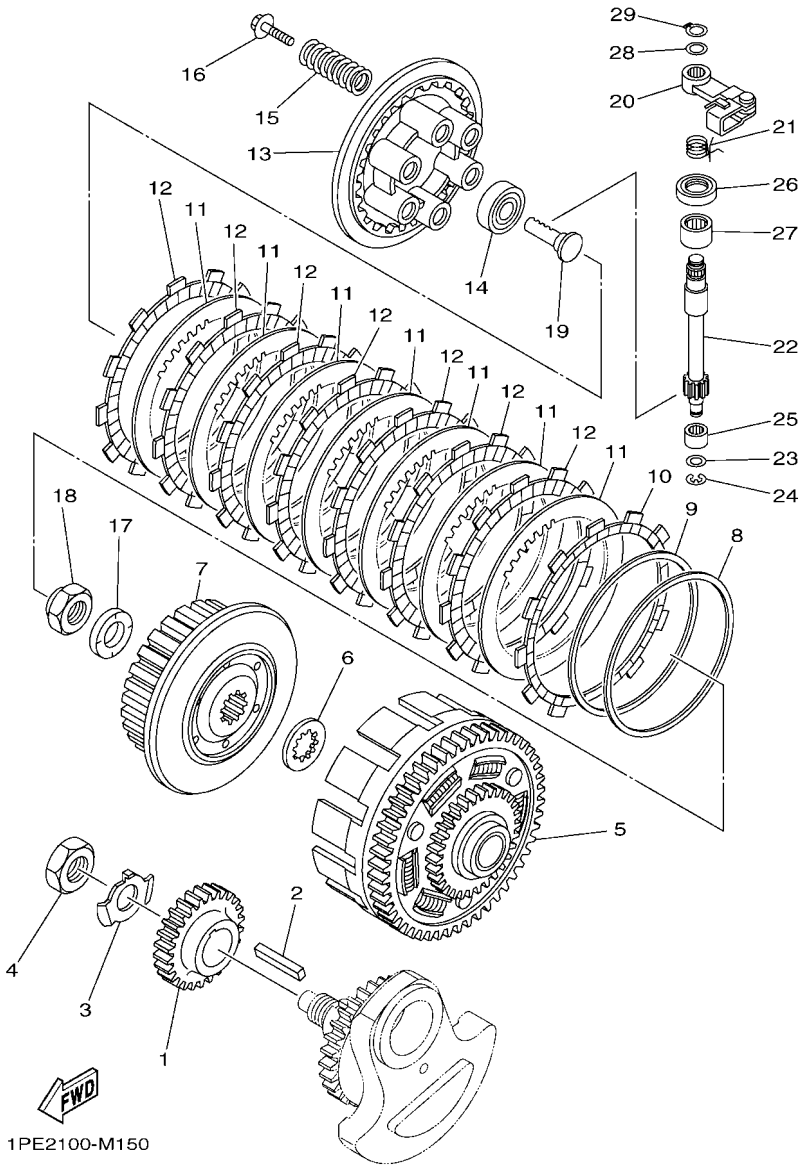

FIG. 15 CLUTCH

REF. NO.	PART NO.	DESCRIPTION	2LSL					REMARKS
1	1S3–16111–00	GEAR, PRIMARY DRIVE	1					
2	90282–07003	KEY, STRAIGHT	1					
3	90215–20006	WASHER, LOCK	1					
4	90170–20274	NUT	1					
5	1S3–16150–00	PRIMARY DRIVEN GEAR COMP.	1					
6	2JN–16154–00	PLATE, THRUST 1	1					
7	1S3–16371–10	BOSS, CLUTCH	1					
8	5JG–16384–00	PLATE, SEAT	1					
9	5JG–16383–00	SPRING.,CUSHION	1					
10	5TG–16331–00	PLATE, FRICTION 2	1					
11	4X7–16325–00	PLATE, CLUTCH 2	7					
12	5TA–16321–00	PLATE, FRICTION	7					
13	1S3–16351–00	PLATE, PRESSURE 1	1					
14	93306–00304	BEARING	1					
15	90501–230E4	SPRING, COMPRESSION	6					
16	90159–06029	SCREW, WITH WASHER	6					
17	90208–20001	WASHER, CONICAL SPRING	1					
18	90179–20007	NUT	1					
19	4XV–16356–01	ROD, PUSH 1	1					
20	3LD–16340–01	PUSH LEVER ASSY	1					
21	90508–18018	SPRING, TORSION	1					
22	5EB–16382–00	AXLE, PUSH LEVER	1					
23	92902–08600	WASHER, PLATE	1					
24	99001–07600	CIRCLIP	1					
25	93317–11096	BEARING	1					
26	93102–15212	OIL SEAL	1					
27	93315–31502	BEARING	1					

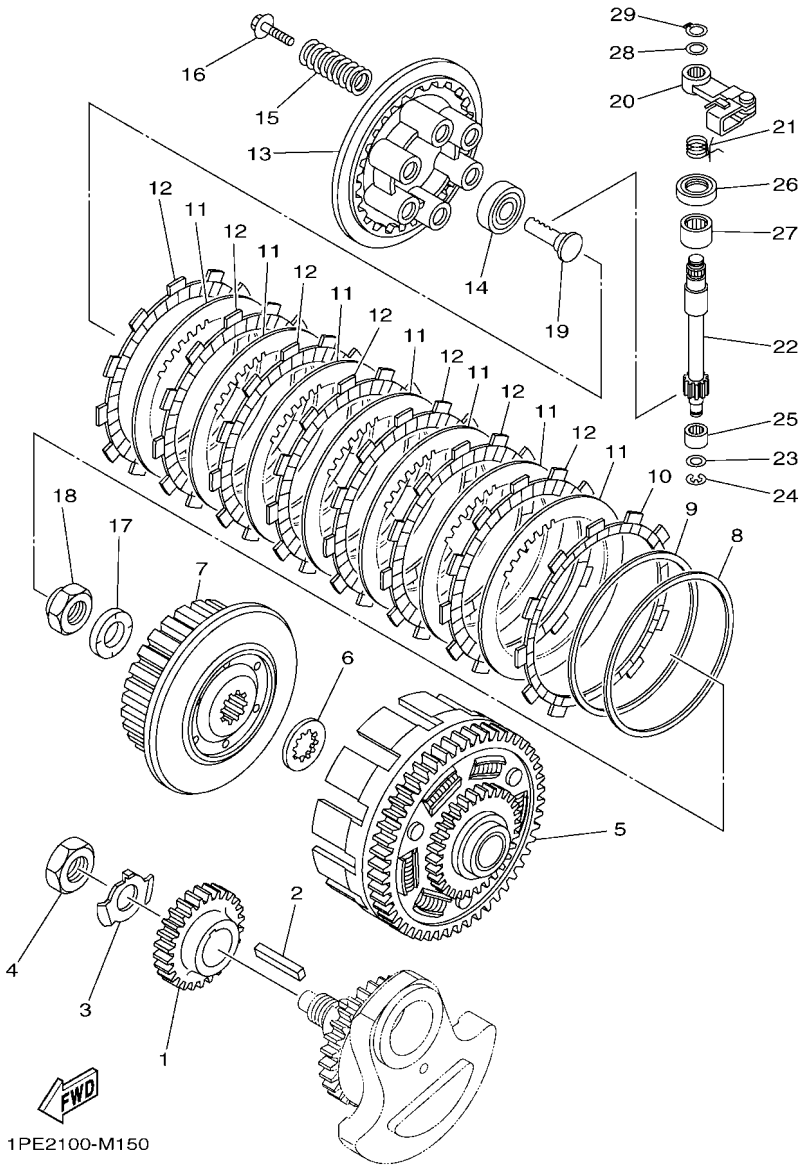

FIG. 15 CLUTCH

REF. NO.	PART NO.	DESCRIPTION	2LSL					REMARKS
28	90201–10614	WASHER, PLATE	1					
29	99009–10400	CIRCLIP	1					

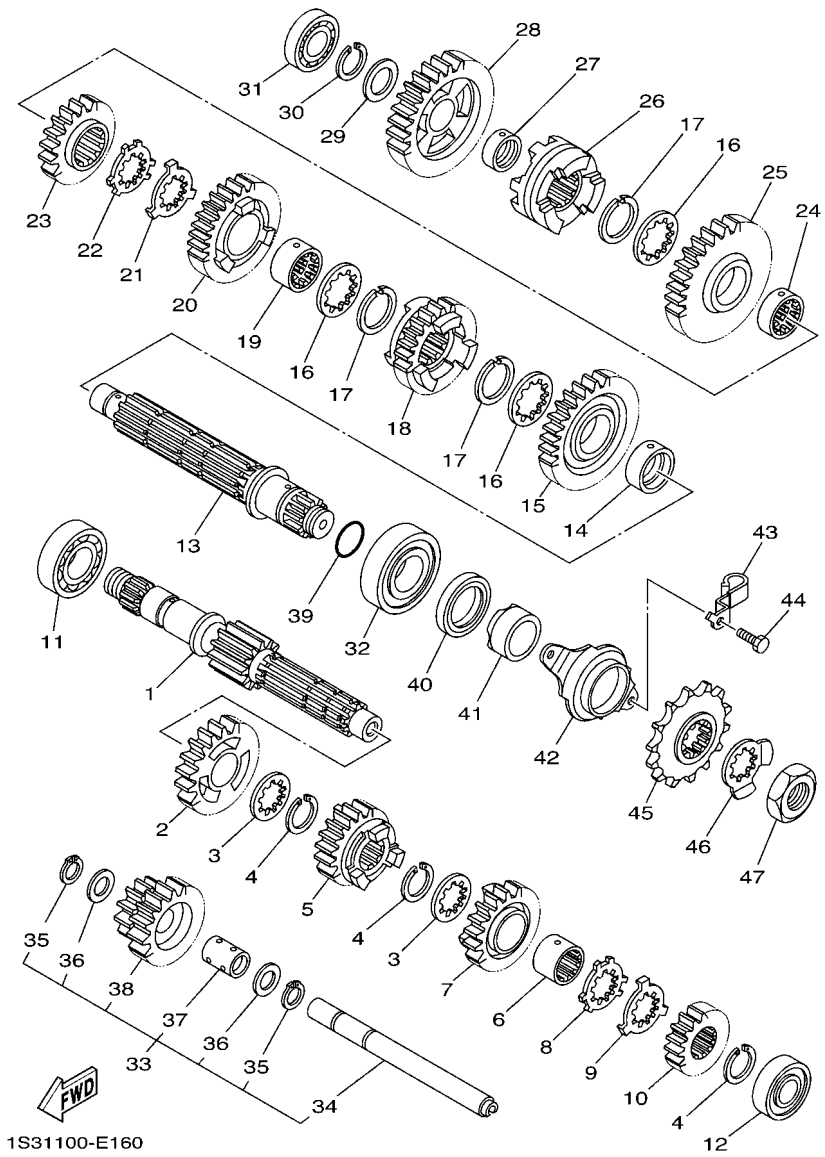

FIG. 16 TRANSMISSION

REF. NO.	PART NO.	DESCRIPTION	2LSL					REMARKS
1	1S3–17401–00	MAIN AXLE ASSY	1					
2	1S3–17151–00	GEAR, 5TH PINION (24T)	1					
3	90209–22008	WASHER	2					
4	93440–25084	CIRCLIP	3					
5	1S3–17131–00	GEAR, 3RD PNION (17T)	1					
6	90387–22006	COLLAR	1					
7	1S3–17141–00	GEAR, 4TH PINION (22T)	1					
8	90214–22003	WASHER, CLAW	1					
9	90214–22002	WASHER, CLAW	1					
10	1S3–17121–00	GEAR, 2ND PINION (14T)	1					
11	93306–20501	BEARING	1					
12	93306–00431	BEARING	1					
13	1S3–17402–00	DRIVE AXLE ASSY	1					
14	90387–28008	COLLAR	1					
15	1S3–17221–00	GEAR, 2ND WHEEL (28T)	1					
16	90209–26008	WASHER	3					
17	93440–28062	CIRCLIP	3					
18	1S3–17241–00	GEAR, 4TH WHEEL (25T)	1					
19	90387–26005	COLLAR	1					
20	1PE–17231–00	GEAR, 3RD WHEEL (25T)	1					
21	90214–26002	WASHER, CLAW	1					
22	90214–26003	WASHER, CLAW	1					
23	1S3–17251–00	GEAR, 5TH WHEEL (22T)	1					
24	90387–26004	COLLAR	1					
25	1S3–17211–00	GEAR, 1ST WHEEL (38T)	1					
26	1S3–17285–00	CLUTCH, DOG	1					
27	90387–20021	COLLAR	1					

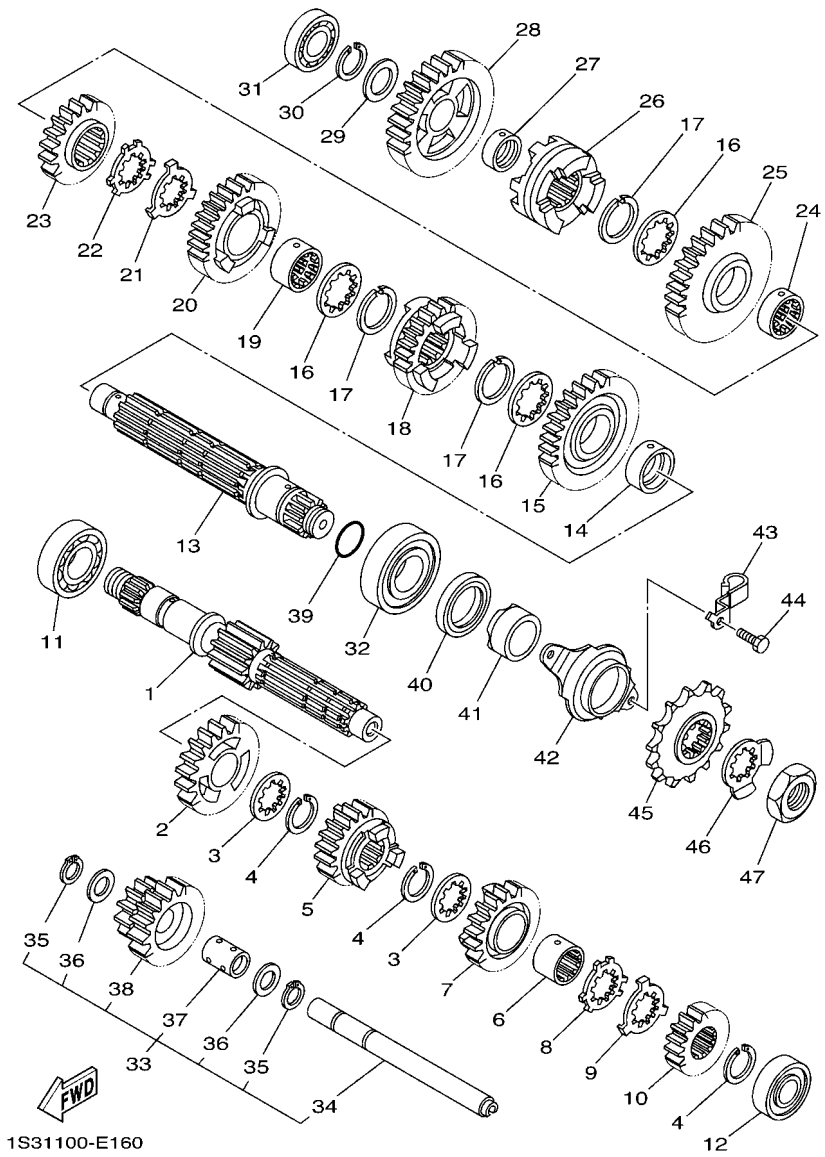

FIG. 16 TRANSMISSION

REF. NO.	PART NO.	DESCRIPTION	2LSL					REMARKS
28	1S3–17253–00	GEAR, REVERSE WHEEL 2 (29T)	1					
29	90201–20276	WASHER, PLATE (T=1.0)	1					
30	99009–20400	CIRCLIP	1					
31	93306–00415	BEARING	1					
32	93306–27803	BEARING	1					
33	1S3–17430–00	COUNTER AXLE ASSY	1					
34	1S3–17432–00	.AXLE, IDLE	1					
35	93440–15012	.CIRCLIP	2					
36	90201–152P4	.WASHER, PLATE	2					
37	90387–1504G	.COLLAR	1					
38	1S3–17243–00	.GEAR, REVERSE WHEEL1(12T/24T)	1					
39	93210–25001	O-RING	1					
40	93102–35393	OIL SEAL	1					
41	90387–28009	COLLAR	1					
42	1S3–17471–00	PLATE, COVER	1					
43	90461–10011	CLAMP	1					
44	97022–06014	BOLT, HEXAGON	2					
45	9383G–14231	SPROCKET, DRIVE (14T)	1					
46	90215–25003	WASHER, LOCK	1					
47	90179–22011	NUT	1					

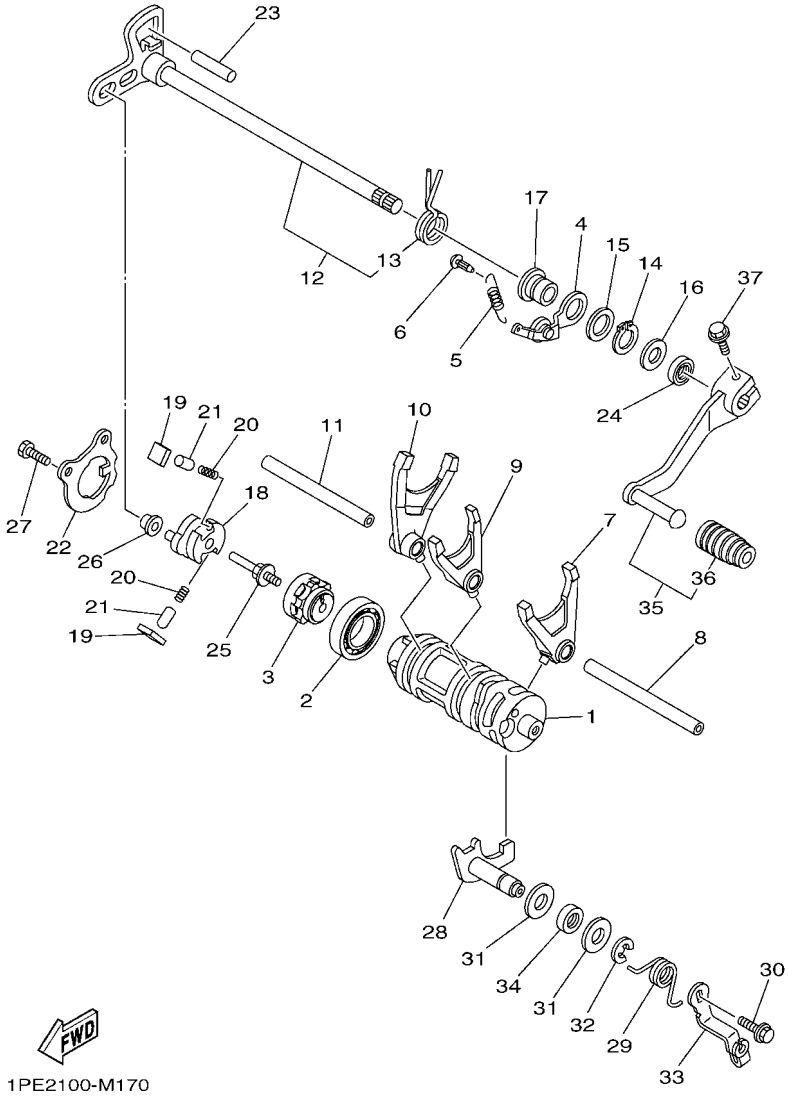

FIG. 17 SHIFT CAM & FORK

REF. NO.	PART NO.	DESCRIPTION	2LSL					REMARKS
1	1PE–18541–00	CAM, SHIFT	1					
2	93306–90509	BEARING	1					
3	2S2–18185–00	SEGMENT	1					
4	1S3–18140–00	STOPPER LEVER ASSY	1					
5	5JW–18144–00	HANGER, SPRING	1					
6	132–16346–00	HOOK, SPRING	1					
7	1PE–18511–00	FORK, SHIFT 1	1					
8	1PE–18531–00	BAR, SHIFT FORK GUIDE 1	1					
9	1PE–18512–00	FORK, SHIFT 2	1					
10	1PE–18513–00	FORK, SHIFT 3	1					
11	1PE–18534–00	BAR, SHIFT FORK GUIDE	1					
12	1S3–18101–10	SHIFT SHAFT ASSY	1					
13	90508–35007	.SPRING, TORSION	1					
14	99009–17400	CIRCLIP	1					
15	90201–177G4	WASHER, PLATE	1					
16	90201–12040	WASHER, PLATE	1					
17	5VK–18699–00	BOSS 1	1					
18	1S3–18122–01	LEVER, SHIFT 2	1					
19	3XJ–18182–00	PAWL, SHIFTER	2					
20	90501–052G5	SPRING, COMPRESSION	2					
21	3XJ–18184–00	PIN, PAWL	2					
22	1S3–18172–00	GUIDE, SHIFT	1					
23	93608–30002	PIN, DOWEL	1					
24	93102–12224	OIL SEAL	1					
25	3XJ–18173–10	PIN, SHIFT	1					
26	3XJ–18178–00	ROLLER, SHIFT LEVER	1					
27	90101–06664	BOLT	2					

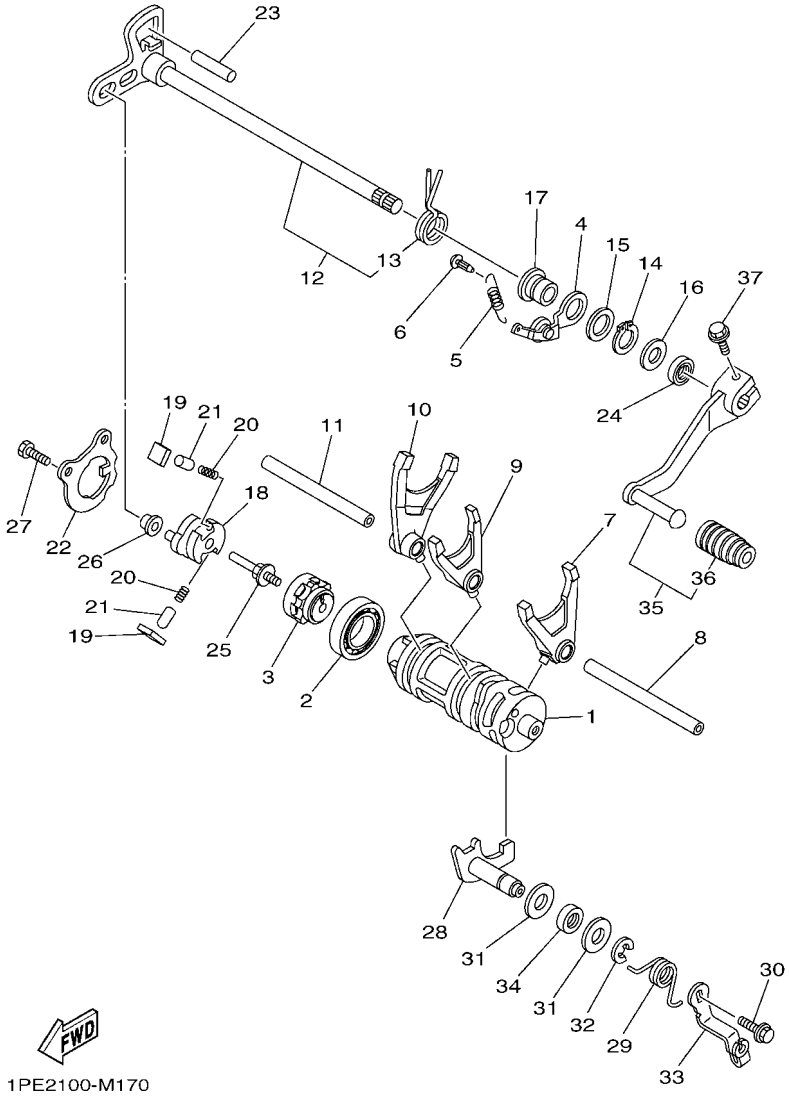

FIG. 17 SHIFT CAM & FORK

REF. NO.	PART NO.	DESCRIPTION	2LSL					REMARKS
28	1S3–18380–00	SHIFTER BRKT. ASSY	1					
29	5LP–18337–01	SPRING	1					
30	95812–06012	BOLT, FLANGE	1					
31	90201–12575	WASHER, PLATE	2					
32	99002–10600	CIRCLIP	1					
33	5LP–18431–00	BRACKET, SHIFTER	1					
34	93102–12106	OIL SEAL (SD 12-22-5 HS)	1					
35	1PE–E8110–00	SHIFT PEDAL ASSY	1					
36	1PE–E8113–00	.COVER, SHIFT PEDAL	1					
37	90105–06142	BOLT, FLANGE	1					

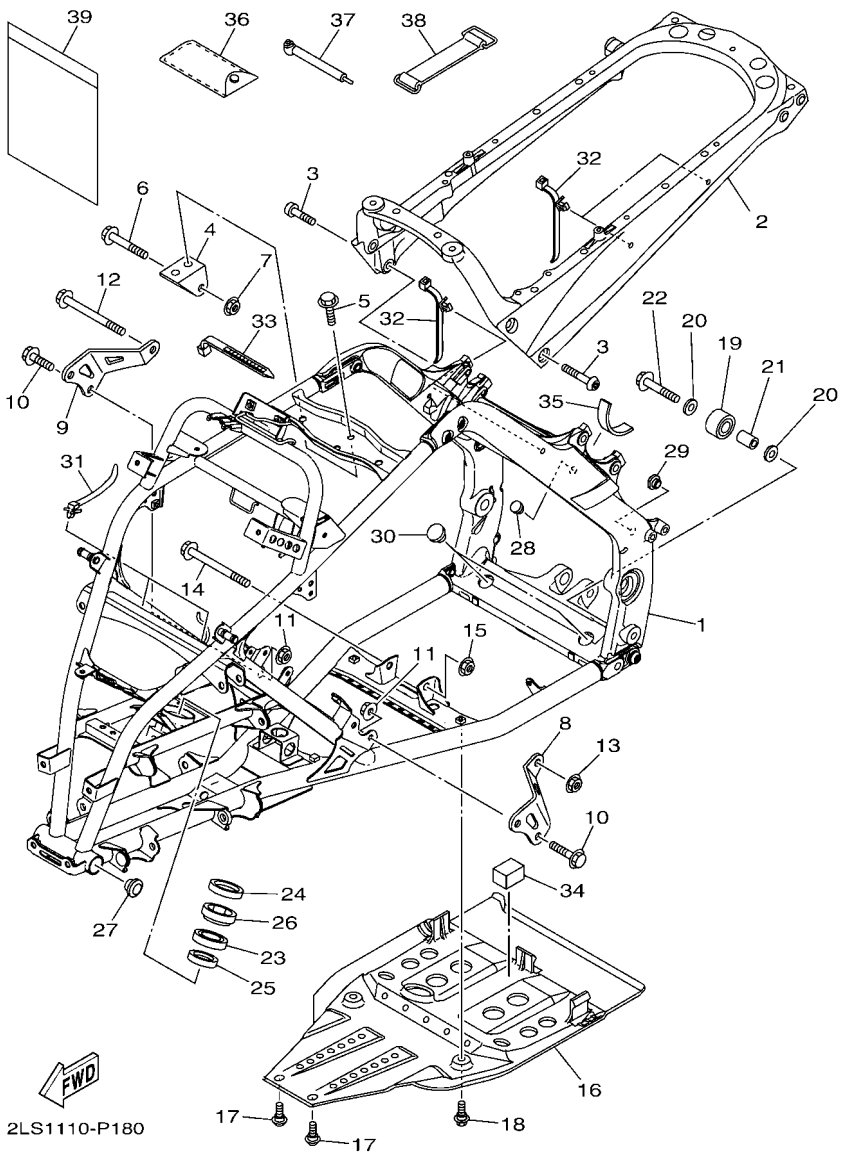

FIG. 18 FRAME

REF. NO.	PART NO.	DESCRIPTION	2LSL					REMARKS
1	2LS–F1101–29	FRONT FRAME COMP.	1					
2	1S3–21190–38	REAR FRAME COMP.	1					
3	90149–10034	SCREW	4					
4	1S3–21315–10	STAY, ENGINE 1	1					
5	90105–08142	BOLT, FLANGE	2					
6	95812–10055	BOLT, FLANGE	1					
7	90185–10011	NUT, SELF-LOCKING	1					
8	1S3–21316–10	STAY, ENGINE 2	1					
9	1S3–21317–10	STAY, ENGINE 3	1					
10	90105–08142	BOLT, FLANGE	4					
11	90179–08674	NUT	4					
12	95812–10110	BOLT, FLANGE	1					
13	90185–10011	NUT, SELF-LOCKING	1					
14	95812–10090	BOLT, FLANGE	1					
15	90185–10011	NUT, SELF-LOCKING	1					
16	1PE–F1471–00	PROTECTOR, ENGINE	1					
17	90109–06201	BOLT	2					
18	90109–06172	BOLT	2					
19	4D3–22178–00	TENSIONER	1					
20	90201–08053	WASHER, PLATE	2					
21	90380–08136	BUSH, SOLID	1					
22	95812–08045	BOLT, FLANGE	1					
23	93306–20352	BEARING	1					
24	93102–25081	OIL SEAL	1					
25	93102–25099	OIL SEAL	1					
26	5GT–23872–00	HOLDER, BEARING	1					
27	90338–26004	PLUG	2					

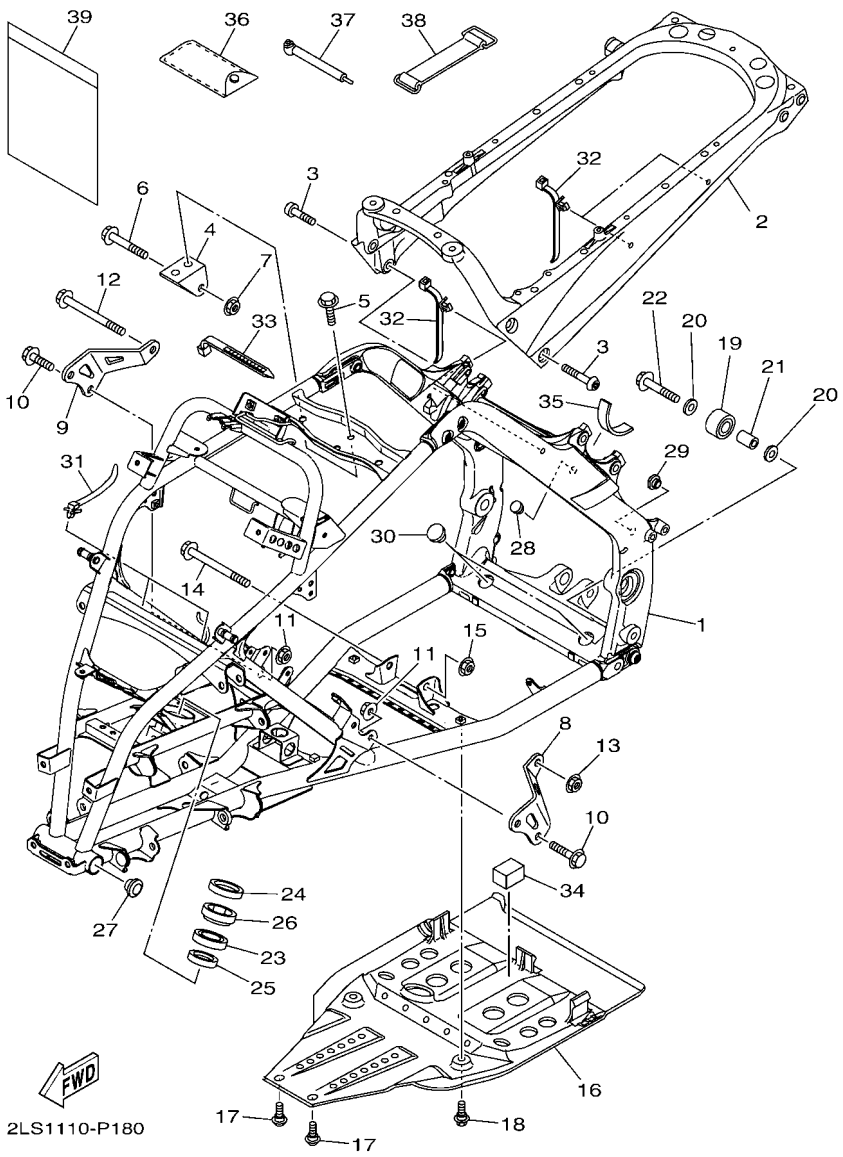

FIG. 18 FRAME

REF. NO.	PART NO.	DESCRIPTION	2LSL					REMARKS
28	90338–24260	PLUG	2					
29	90338–20183	PLUG	2					
30	90338–23004	PLUG	2					
31	5B4–F1338–00	CLAMP	2					
32	90464–20213	CLAMP	3					
33	90464–12045	CLAMP	1					
34	1S3–2140A–00	DAMPER, STOPPER	1					
35	1JK–21639–00	DAMPER 2	1					
36	1PE–F8100–01	TOOL KIT	1					
37	1NV–2811A–01	GAUGE, AIR	1					
38	116–82131–00	BAND, BATTERY	1					
39	1P0–F8186–01	POUCH	1					

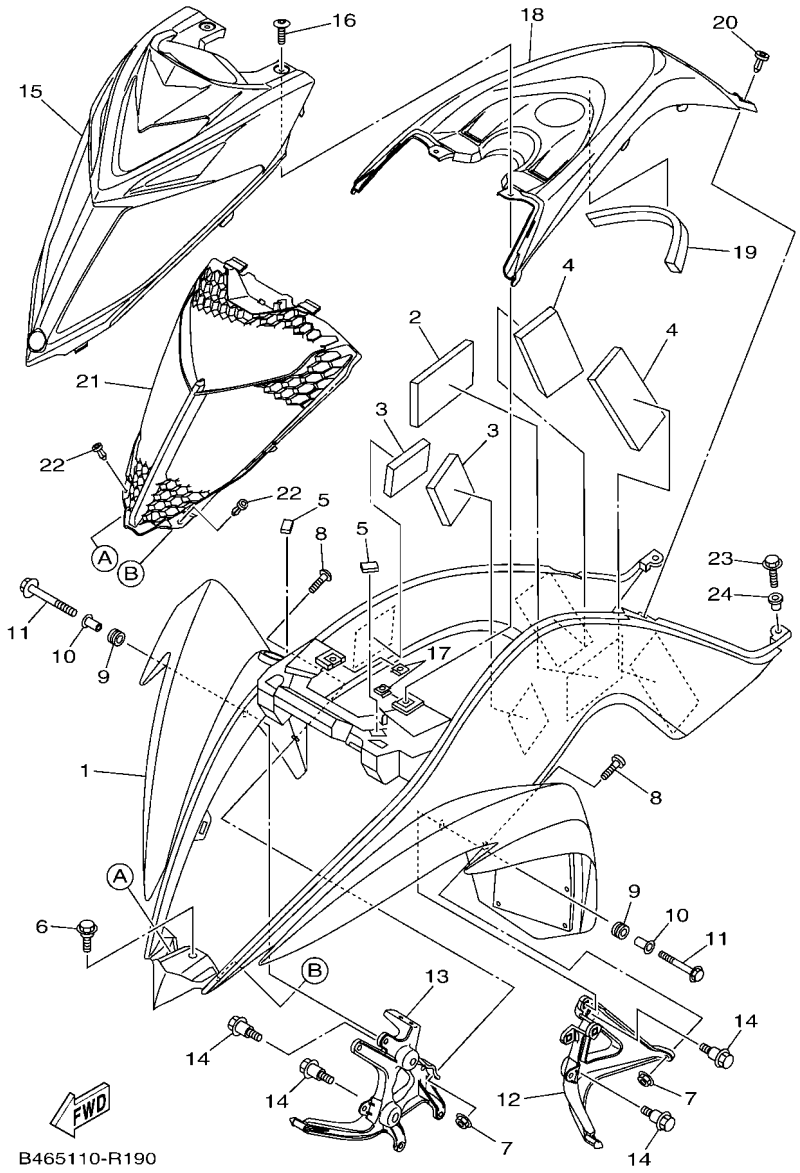

FIG. 19 FRONT FENDER

REF. NO.	PART NO.	DESCRIPTION	2LSL					REMARKS
1	1PE–F1500–K0	FRONT FENDER ASSY	1					
2	12R–21747–00	DAMPER	1					
3	1S3–21541–00	DAMPER 1	2					
4	3Y0–24183–00	DAMPER, LOCATING 3	2					
5	3B4–21541–00	DAMPER 1	2					
6	90109–06172	BOLT	1					
7	95602–06200	NUT, SELF-LOCKING	2					
8	90111–06137	BOLT,HEX. SOCKET BUTTON	2					
9	90480–14102	GROMMET	2					
10	90387–06136	COLLAR	2					
11	95812–06025	BOLT, FLANGE	2					
12	1PE–F1513–01	STAY, FENDER 1	1					
13	1PE–F1514–01	STAY, FENDER 2	1					
14	90109–06214	BOLT	4					
15	1PE–F3391–60	PANEL, FRONT	1					
16	90111–06814	BOLT,HEX. SOCKET BUTTON	2					
17	90183–06053	NUT, SPRING	2					
18	1PE–F171A–60	COVER, TOP	1					
19	90520–20001	DAMPER, PLATE	1					
20	90269–06002	RIVET	2					
21	1PE–E2467–00	COVER, RADIATOR	1					
22	90269–06002	RIVET	2					
23	90105–06084	BOLT, FLANGE	2					
24	90387–06146	COLLAR	2					

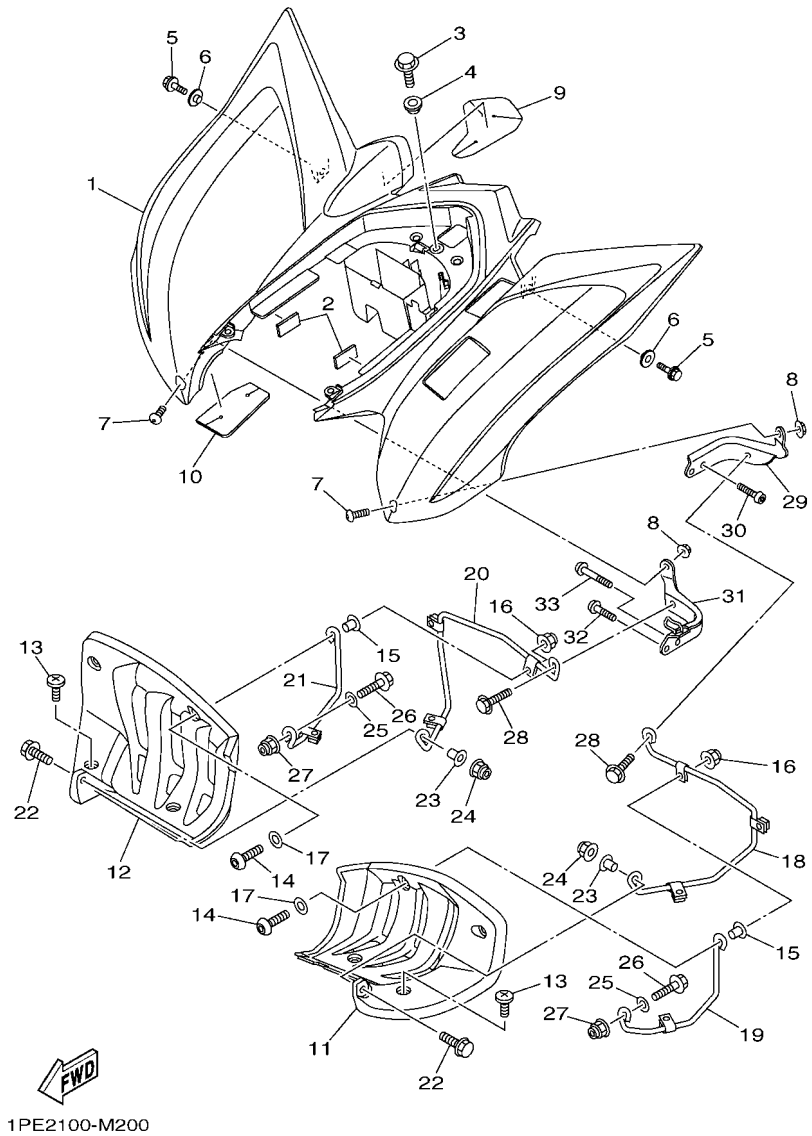

FIG. 20 REAR FENDER

REF. NO.	PART NO.	DESCRIPTION	2LSL					REMARKS
1	2LS–F1600–00	REAR FENDER ASSY	1					
2	1S3–2140A–00	DAMPER, STOPPER	2					
3	90105–06084	BOLT, FLANGE	1					
4	90387–06153	COLLAR	1					
5	90105–06080	BOLT, FLANGE	2					
6	90387–06153	COLLAR	2					
7	90111–06814	BOLT,HEX. SOCKET BUTTON	2					
8	95602–06200	NUT, SELF-LOCKING	2					
9	1S3–2163A–00	COVER, REAR FENDER 1	1					
10	1S3–2163E–00	COVER, REAR FENDER 2	1					
11	1PE–F1621–00	FLAP	1					
12	1PE–F1691–00	FLAP	1					
13	90154–05043	SCREW, BINDING	6					
14	92012–06025	BOLT, BUTTON HEAD	2					
15	90560–06201	SPACER	2					
16	95602–06200	NUT, SELF-LOCKING	2					
17	90201–06076	WASHER, PLATE	2					
18	1S3–2164F–10	STAY 1	1					
19	1S3–2164H–20	STAY 3	1					
20	5TG–2164G–20	STAY 2	1					
21	1S3–2164J–20	STAY 4	1					
22	95812–06025	BOLT, FLANGE	2					
23	90387–06204	COLLAR	2					
24	95602–06200	NUT, SELF-LOCKING	2					
25	90201–08053	WASHER, PLATE	2					
26	95822–08020	BOLT, FLANGE	2					
27	95602–08200	NUT, U FLANGE	2					

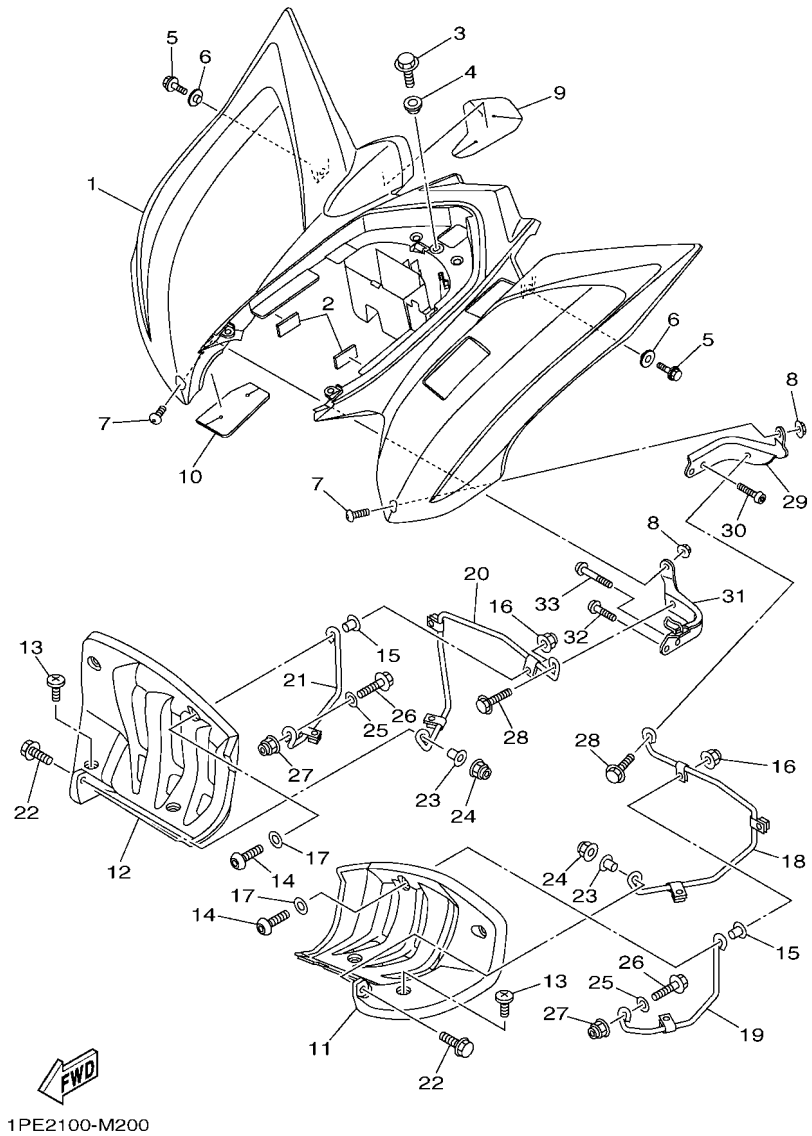

FIG. 20 REAR FENDER

REF. NO.	PART NO.	DESCRIPTION	2LSL					REMARKS
28	95822–08016	BOLT, FLANGE	2					
29	1PE–F1643–00	STAY, REAR	1					
30	92012–08020	BOLT, BUTTON HEAD	2					
31	1PE–F1644–00	STAY, REAR	1					
32	92012–08016	BOLT, BUTTON HEAD	1					
33	92012–08035	BOLT, BUTTON HEAD	1					

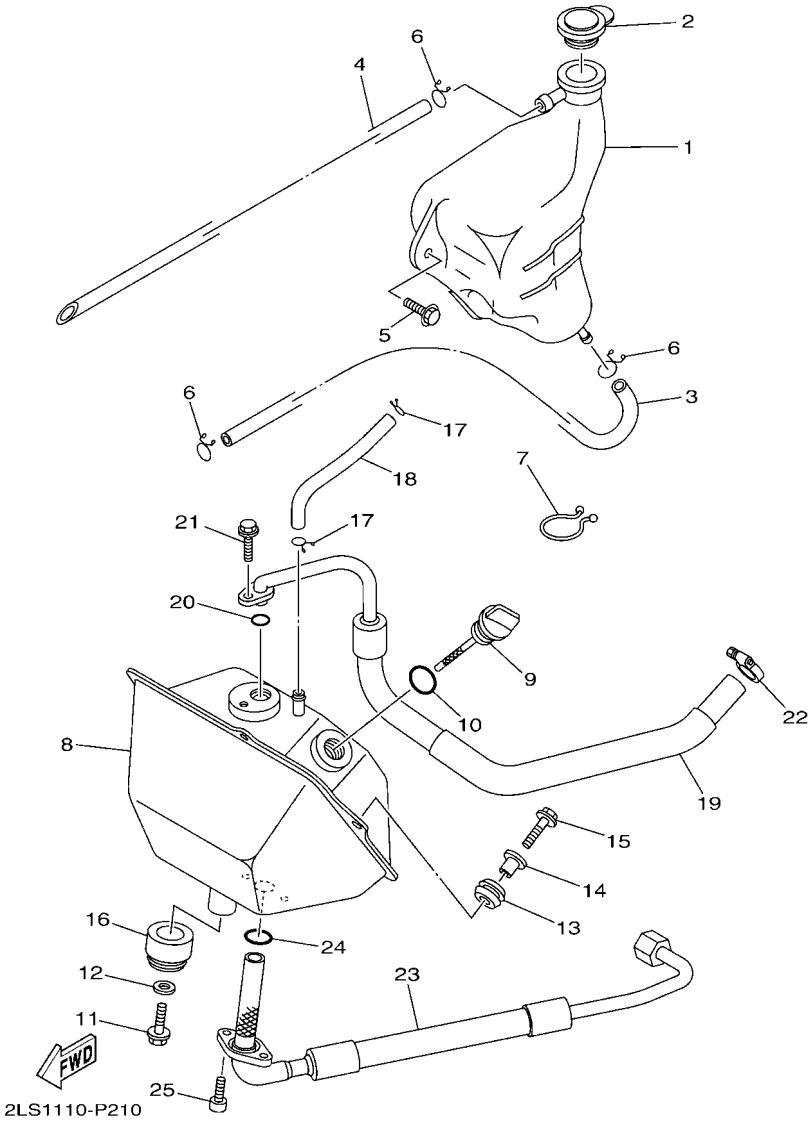

FIG. 21 OIL TANK

REF. NO.	PART NO.	DESCRIPTION	2LSL					REMARKS
1	1PE–F1871–00	TANK, RECOVERY	1					
2	1S3–21875–00	CAP	1					
3	90445–09M30	HOSE (L630)	1					
4	90445–09777	HOSE (L300)	1					
5	90119–06152	BOLT, WITH WASHER	2					
6	90467–08003	CLIP	3					
7	90464–23041	CLAMP	2					
8	1S3–21750–10	OIL TANK ASSY	1					
9	5LP–21761–01	GAUGE, LEVEL	1					
10	93210–21190	O-RING	1					
11	95812–08016	BOLT, FLANGE	1					
12	90201–082A6	WASHER, PLATE	1					
13	90480–13459	GROMMET	2					
14	90387–06205	COLLAR	2					
15	95812–06020	BOLT, FLANGE	2					
16	90480–24004	GROMMET	1					
17	90467–100A1	CLIP	2					
18	90445–11034	HOSE (L147)	1					
19	2LS–13465–10	HOSE, OIL 2	1					
20	93210–10197	O-RING	1					
21	95022–06016	BOLT, FLANGE	1					
22	90450–22017	HOSE CLAMP ASSY	1					
23	1S3–13464–10	HOSE, OIL 1	1					
24	93210–16629	O-RING	1					
25	91312–06016	BOLT, HEXAGON SOCKET HEAD	2					

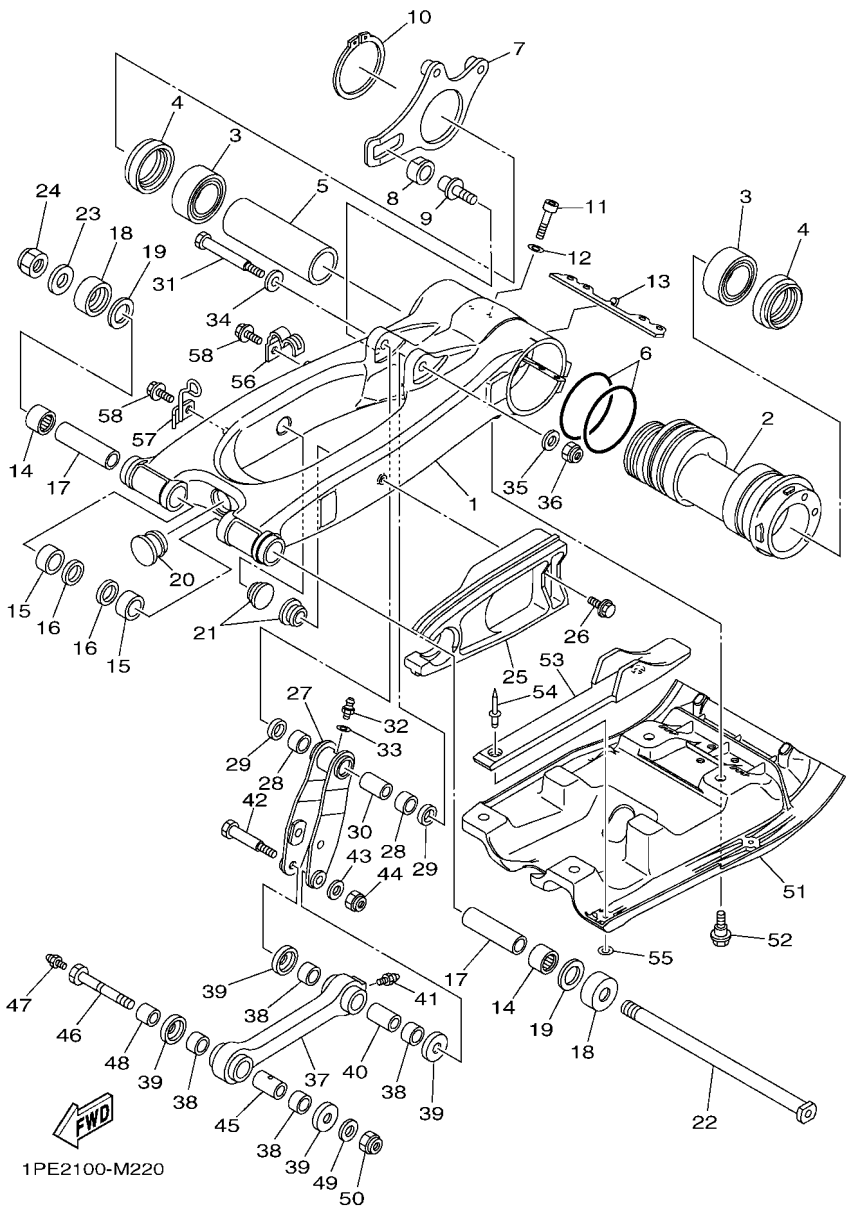

FIG. 22 REAR ARM

REF. NO.	PART NO.	DESCRIPTION	2LSL					REMARKS
1	1S3–22110–00	REAR ARM COMP.	1					
2	1PE–25311–00	HUB, REAR	1					
3	93304–20812	BEARING	2					
4	93106–46003	OIL SEAL	2					
5	1PE–25317–00	SPACER, BEARING	1					
6	1S3–23147–01	O-RING	2					
7	1PE–25721–00	BRACKET, CALIPER	1					
8	90387–16014	COLLAR	1					
9	90110–12001	BOLT, HEXAGON SOCKET HEAD	1					
10	93410–67085	CIRCLIP	1					
11	91314–08040	BOLT, HEXAGON SOCKET HEAD	4					
12	92903–08600	WASHER, PLATE	4					
13	1S3–22475–00	SEAL, DUST	1					
14	93317–22237	BEARING	2					
15	90380–22111	BUSH, SOLID	2					
16	93106–22019	OIL SEAL (DC 22-28-8)	2					
17	1S3–22184–00	BUSH	2					
18	4X7–22129–00	COVER, THRUST 2	2					
19	3YF–22149–00	WASHER	2					
20	1S3–22417–00	PLUG	1					
21	90338–23004	PLUG	2					
22	1S3–22141–00	SHAFT, PIVOT	1					
23	90201–16018	WASHER, PLATE	1					
24	90185–16002	NUT, SELF-LOCKING	1					
25	1S3–22151–00	SEAL, GUARD	1					
26	90109–06172	BOLT	1					
27	1PE–F217A–00	ARM, RELAY	1					

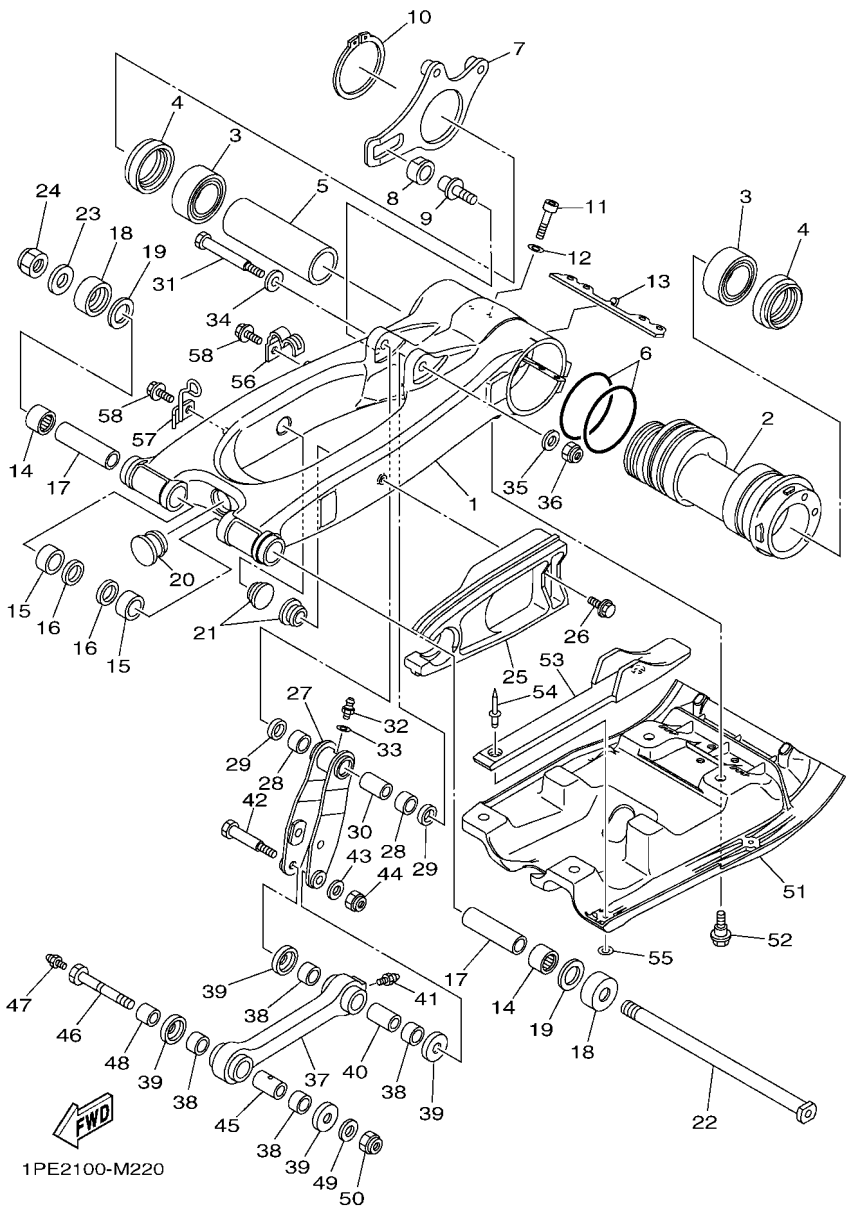

FIG. 22 REAR ARM

REF. NO.	PART NO.	DESCRIPTION	2LSL					REMARKS
28	90383–20032	BUSH, FORMED	2					
29	93109–20076	OIL SEAL	2					
30	90387–12021	COLLAR	1					
31	90109–10018	BOLT	1					
32	93700–06004	NIPPLE, GREASE	1					
33	90201–063F3	WASHER, PLATE	1					
34	90201–12030	WASHER, PLATE	1					
35	90201–10034	WASHER, PLATE	1					
36	90185–10012	NUT, SELF-LOCKING	1					
37	1PE–F217F–00	ROD, CONNECTING 1	1					
38	90383–20032	BUSH, FORMED	4					
39	5YT–22129–00	COVER, THRUST 2	4					
40	90387–12010	COLLAR	1					
41	93700–06004	NIPPLE, GREASE	1					
42	90109–10020	BOLT	1					
43	90201–10035	WASHER, PLATE	1					
44	90185–10012	NUT, SELF-LOCKING	1					
45	90387–12010	COLLAR	1					
46	90109–12009	BOLT	1					
47	93700–06004	NIPPLE, GREASE	1					
48	90387–12028	COLLAR	1					
49	90201–12032	WASHER, PLATE	1					
50	90185–12007	NUT, SELF-LOCKING	1					
51	1PE–F219X–00	COVER	1					
52	90109–06199	BOLT	4					
53	1S3–22153–00	GUARD, CHAIN	1					
54	90267–47187	RIVET, BLIND (4.7X16.4 BLACK)	2					

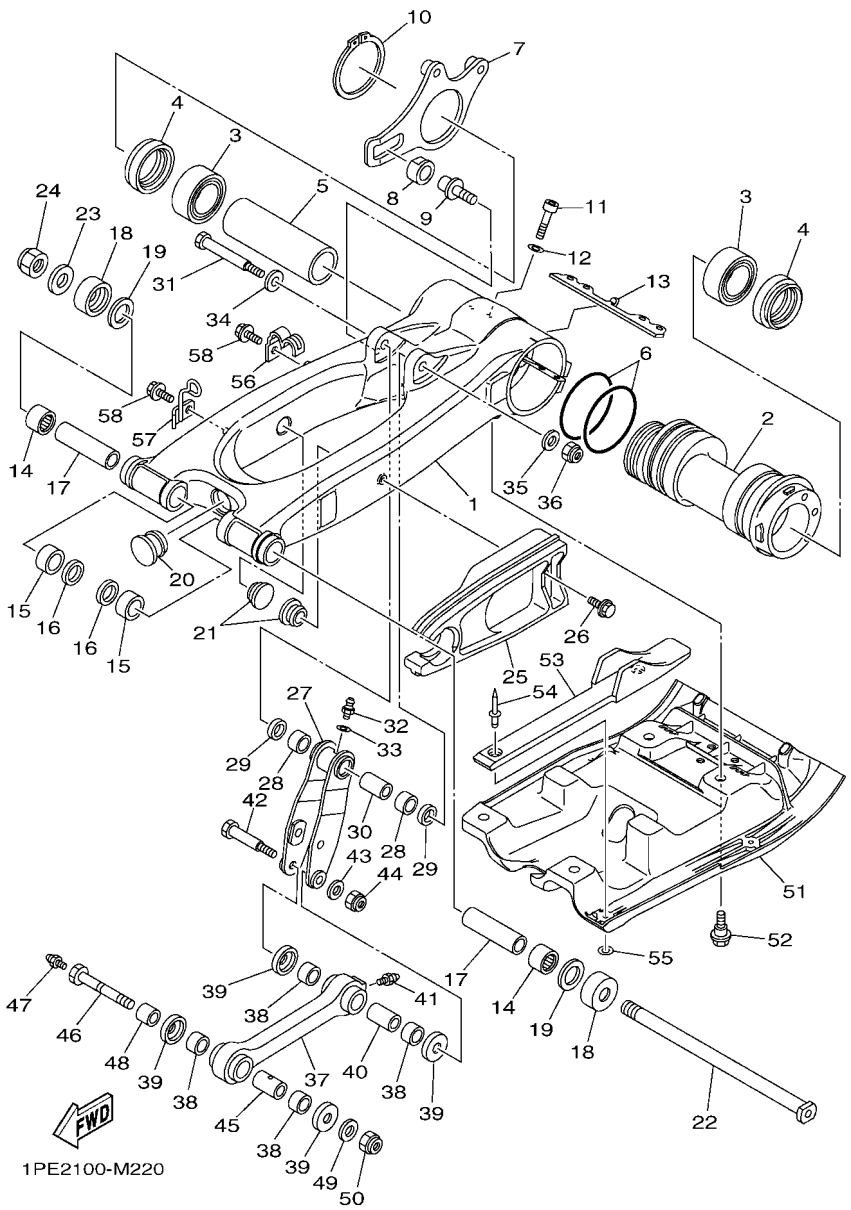

FIG. 22 REAR ARM

REF. NO.	PART NO.	DESCRIPTION	2LSL					REMARKS
55	90201–04027	WASHER, PLATE	2					
56	1S3–25886–00	HOLDER, BRAKE HOSE	1					
57	1S3–23317–00	HOLDER, CABLE	1					
58	95022–06012	BOLT, FLANGE	2					

FIG. 23 REAR SUSPENSION

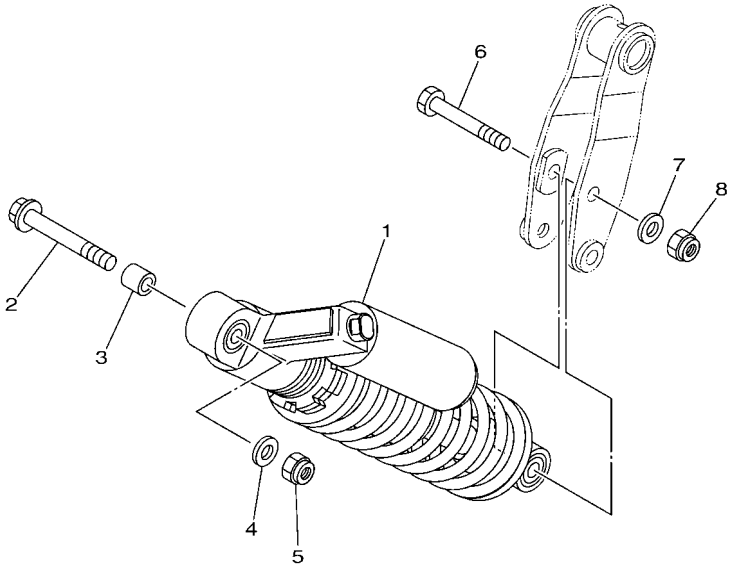

2LS1110-P230

REF. NO.	PART NO.	DESCRIPTION	2LSL					REMARKS
1	2LS–F2200–00	SHOCK ABSORBER ASSY, REAR	1					
2	90105–12038	BOLT, FLANGE	1					
3	90387–12028	COLLAR	1					
4	90201–12032	WASHER, PLATE	1					
5	90185–12007	NUT, SELF-LOCKING	1					
6	90109–10019	BOLT	1					
7	90201–10036	WASHER, PLATE	1					
8	90185–10012	NUT, SELF-LOCKING	1					

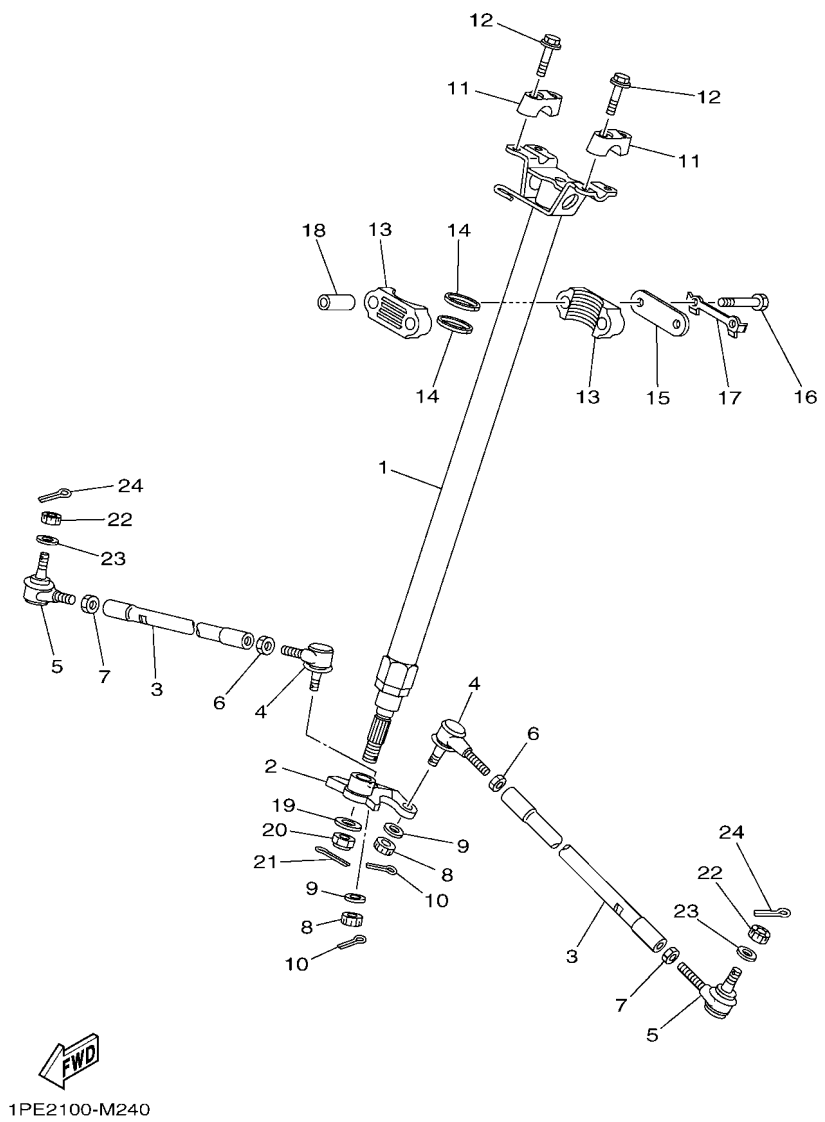

FIG. 24 STEERING

REF. NO.	PART NO.	DESCRIPTION	2LSL					REMARKS
1	1PE–F3813–00	COLUMN, STEERING 2	1					
2	1PE–F3816–00	ARM, PITMAN	1					
3	1PD–23831–00	ROD, TIE	2					
4	1S3–23841–20	JOINT, UNIVERSAL 1	2					
5	1S3–23845–20	JOINT, UNIVERSAL 2	2					
6	90170–12055	NUT	2					
7	90170–12054	NUT	2					(RH. THREAD)
8	90171–10001	NUT, CASTLE	2					
9	90209–10229	WASHER	2					
10	91402–20020	PIN, COTTER	2					
11	8K1–23814–00	HOLDER, HANDLE	2					
12	95822–08030	BOLT, FLANGE	4					
13	37S–F3812–00	BEARING, STEERING	2					
14	93112–31800	OIL SEAL	2					
15	1PE–F3868–00	BRACKET, STEERING LOWER	1					
16	97022–08060	BOLT, HEXAGON	2					
17	1UY–23894–01	WASHER, LOCK 1	1					
18	90387–090R0	COLLAR	2					
19	90201–14021	WASHER, PLATE	1					
20	90185–14009	NUT, SELF-LOCKING	1					
21	91402–20025	PIN, COTTER	1					
22	90171–10001	NUT, CASTLE	2					
23	90209–10229	WASHER	2					
24	91402–20020	PIN, COTTER	2					

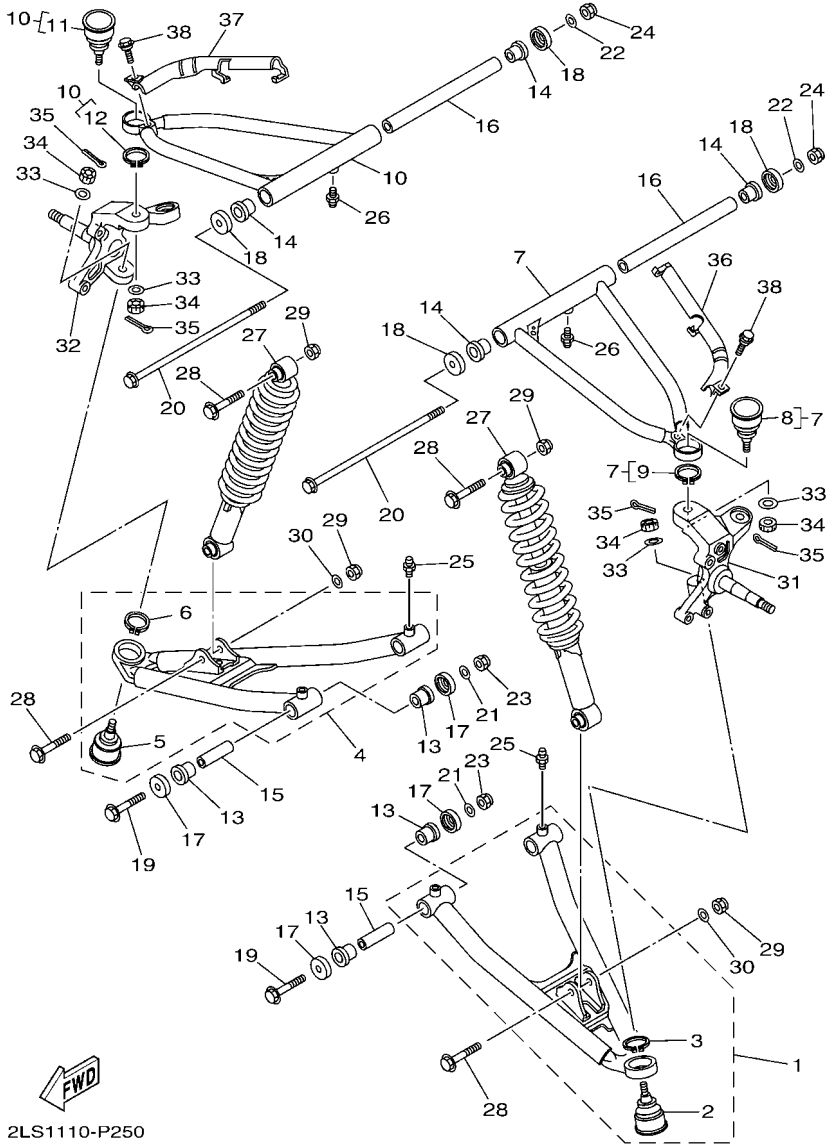

FIG. 25 FRONT SUSPENSION & WHEEL

REF. NO.	PART NO.	DESCRIPTION	2LSL					REMARKS
1	1PE–F3570–60	FRONT LOWER ARM COMP. (LEFT)	1					
2	5LP–23579–00	.BALL JOINT 2	1					
3	99009–30400	.CIRCLIP	1					
4	1PE–F3580–60	FRONT LOWER ARM COMP. (RIGHT)	1					
5	5LP–23579–00	.BALL JOINT 2	1					
6	99009–30400	.CIRCLIP	1					
7	2LS–F3540–00	FRONT UPPER ARM COMP. (LEFT)	1					
8	5LP–23579–00	.BALL JOINT 2	1					
9	99009–30400	.CIRCLIP	1					
10	2LS–F3550–00	FRONT UPPER ARM COMP. (RIGHT)	1					
11	5LP–23579–00	.BALL JOINT 2	1					
12	99009–30400	.CIRCLIP	1					
13	90381–15088	BUSH, SOLID	8					
14	90381–15088	BUSH, SOLID	4					
15	90387–101R3	COLLAR	4					
16	90387–100Y6	COLLAR	2					
17	1UY–23517–01	COVER, THRUST 1	8					
18	1UY–23517–01	COVER, THRUST 1	4					
19	90105–10135	BOLT, FLANGE	4					
20	90105–10132	BOLT, FLANGE	2					
21	90201–10037	WASHER, PLATE	4					
22	90201–10037	WASHER, PLATE	2					
23	90185–10012	NUT, SELF-LOCKING	4					
24	90185–10012	NUT, SELF-LOCKING	2					
25	93700–06004	NIPPLE, GREASE	4					
26	93700–06004	NIPPLE, GREASE	2					
27	1PE–F3390–00	SHOCK ABSORBER ASSY 2	2					

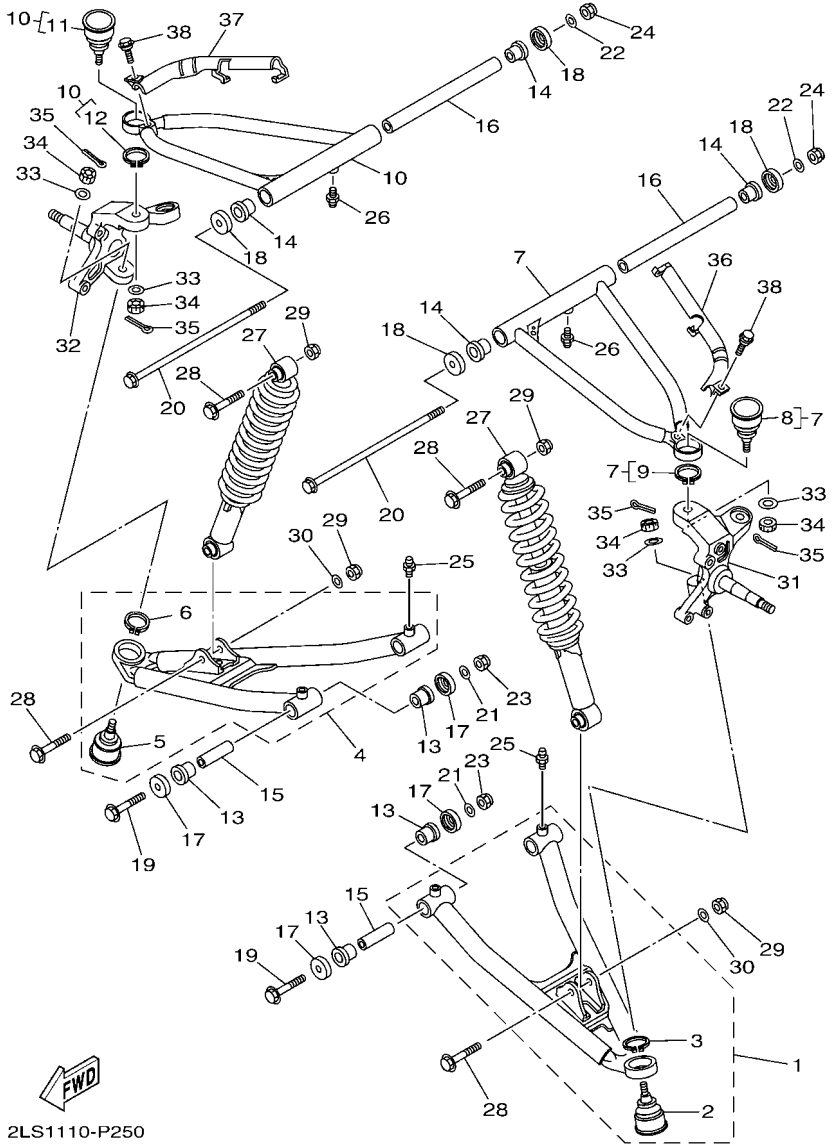

FIG. 25 FRONT SUSPENSION & WHEEL

REF. NO.	PART NO.	DESCRIPTION	2LSL					REMARKS
28	90105–10131	BOLT, FLANGE	4					
29	90185–10012	NUT, SELF-LOCKING	4					
30	90201–10035	WASHER, PLATE	2					
31	1S3–23501–01	STEERING KNUCKLE ASSY (LEFT)	1					
32	1S3–23502–01	STEERING KNUCKLE ASSY (RIGHT)	1					
33	90209–10229	WASHER	4					
34	90171–10001	NUT, CASTLE	4					
35	91402–20020	PIN, COTTER	4					
36	2LS–F5875–00	HOLDER, BRAKE HOSE 1	1					
37	2LS–F5876–00	HOLDER, BRAKE HOSE 2	1					
38	90109–06264	BOLT	2					

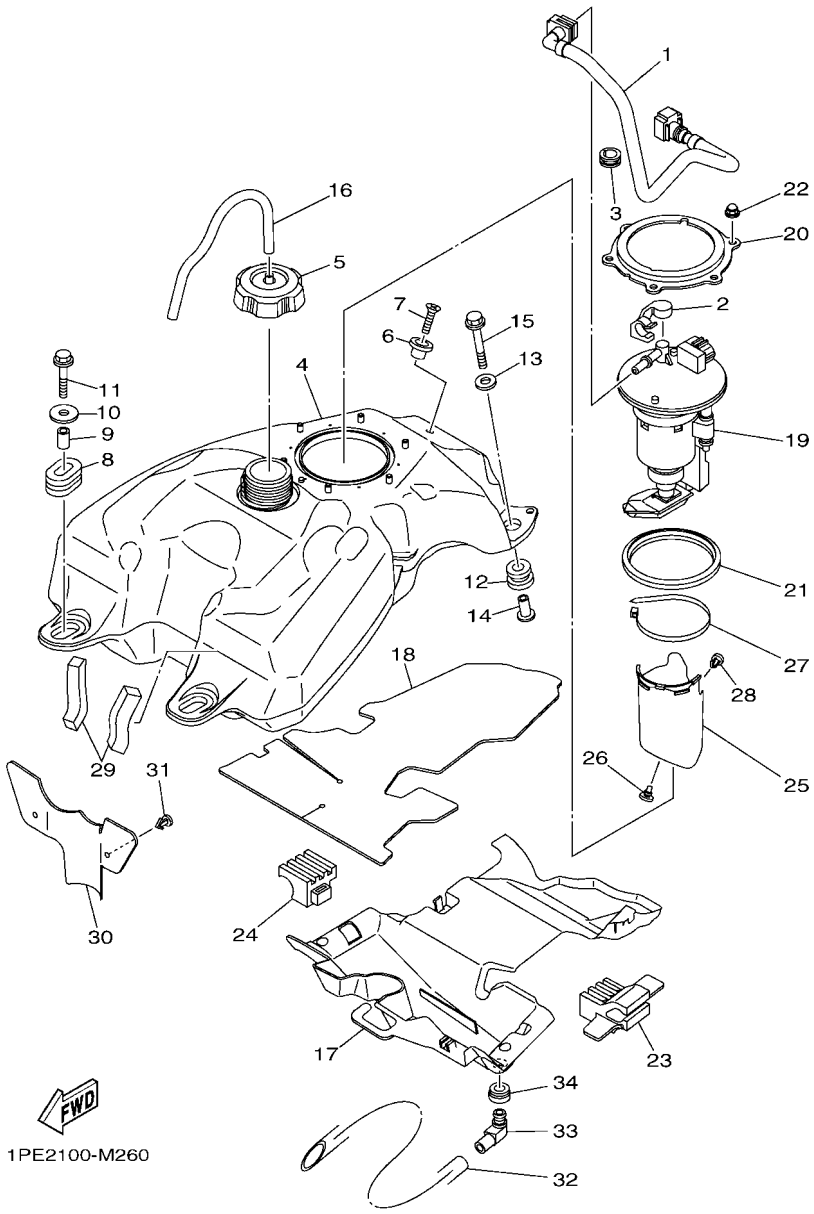

FIG. 26 FUEL TANK

REF. NO.	PART NO.	DESCRIPTION	2LSL					REMARKS
1	1PE–13971–00	PIPE, FUEL 1	1					
2	90464–14004	CLAMP	1					
3	90480–17011	GROMMET	1					
4	1PE–F4110–00	FUEL TANK COMP.	1					
5	2FJ–24610–10	CAP ASSY	1					
6	4EW–2412F–00	BRACKET, SEAT	1					
7	90151–06005	SCREW, COUNTERSUNK	1					
8	90480–01017	GROMMET	2					
9	90387–06M17	COLLAR	2					
10	90201–06090	WASHER, PLATE	2					
11	95802–06035	BOLT, FLANGE	2					
12	90480–18005	GROMMET	2					
13	90201–06033	WASHER, PLATE	2					
14	90387–06098	COLLAR	2					
15	95802–06035	BOLT, FLANGE	2					
16	90445–083J4	HOSE (L340)	1					
17	1S3–2414H–00	DAMPER, PLATE 1	1					
18	1PE–F416F–00	INSULATOR, FUEL TANK 1	1					
19	1S3–13907–10	FUEL PUMP COMP.	1					
20	1S3–24491–10	BRACKET, FUEL PUMP	1					
21	1S3–24486–00	O-RING	1					
22	95302–06800	NUT, CROWN	6					
23	1S3–24278–00	STOPPER 1	1					
24	1S3–24279–00	STOPPER 2	1					
25	1S3–24452–00	COVER	1					
26	90338–05008	PLUG	2					
27	90464–66001	CLAMP	1					

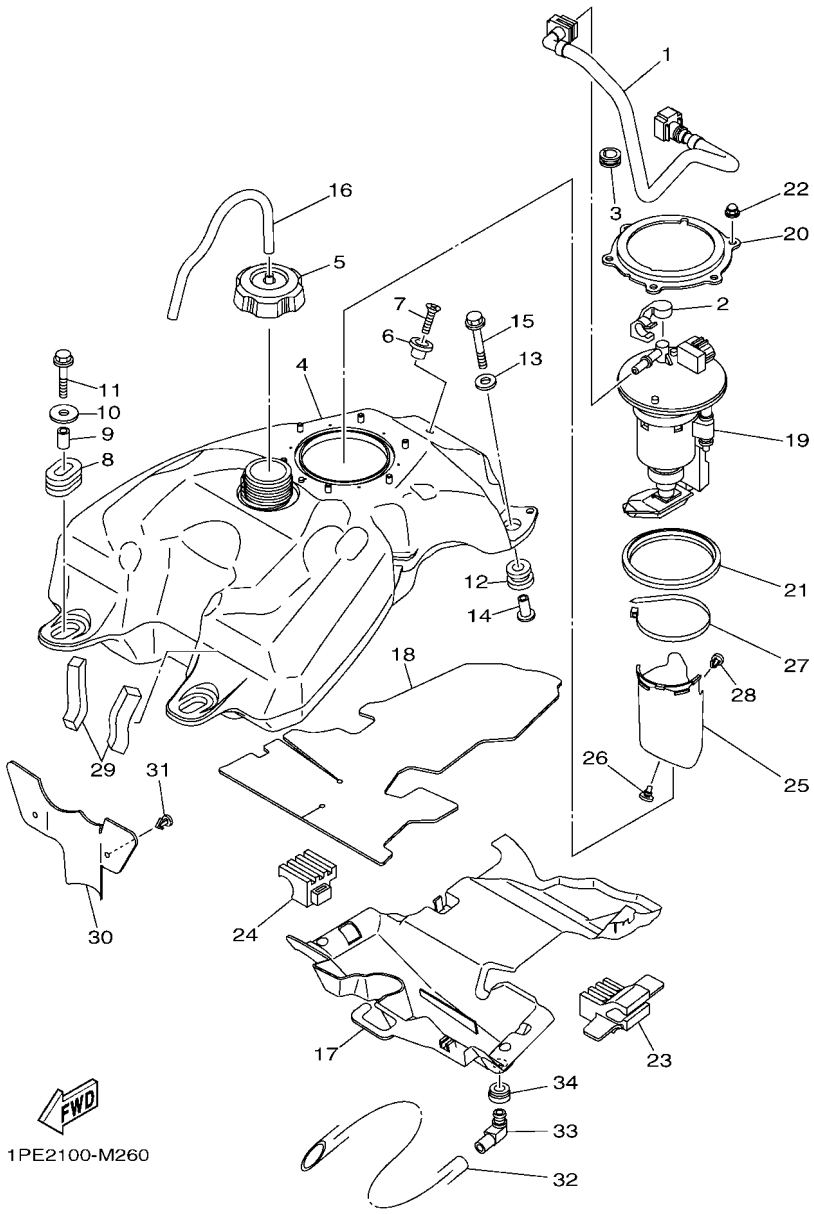

FIG. 26 FUEL TANK

REF. NO.	PART NO.	DESCRIPTION	2LSL					REMARKS
28	90269–07011	RIVET	1					
29	1S3–24182–00	DAMPER, LOCATING 2	2					
30	1S3–2413X–00	PLATE	1					
31	90269–05055	RIVET	2					
32	90445–16007	HOSE (L400)	1					
33	31A–14419–00	PIPE	1					
34	31A–14435–00	GROMMET	1					

FIG. 27 SEAT

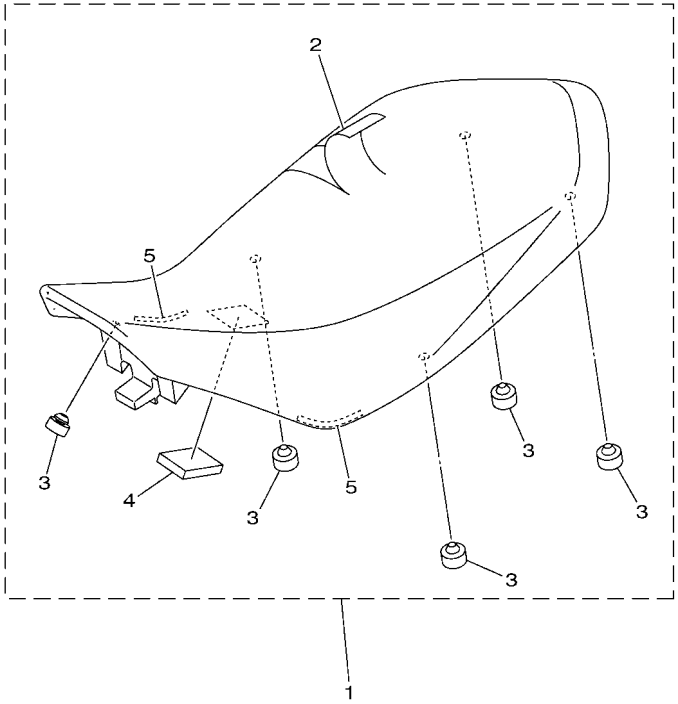

1PE2100-M270

REF. NO.	PART NO.	DESCRIPTION	2LSL					REMARKS
1	1PE–F4710–20	SINGLE SEAT ASSY	1					
2	2LS–F4731–00	.COVER, SEAT	1					
3	4XE–F4747–00	.DAMPER, SEAT	5					
4	1PE–F4723–00	.DAMPER, SEAT	1					
5	1PE–F4737–00	.DAMPER, SEAT	2					

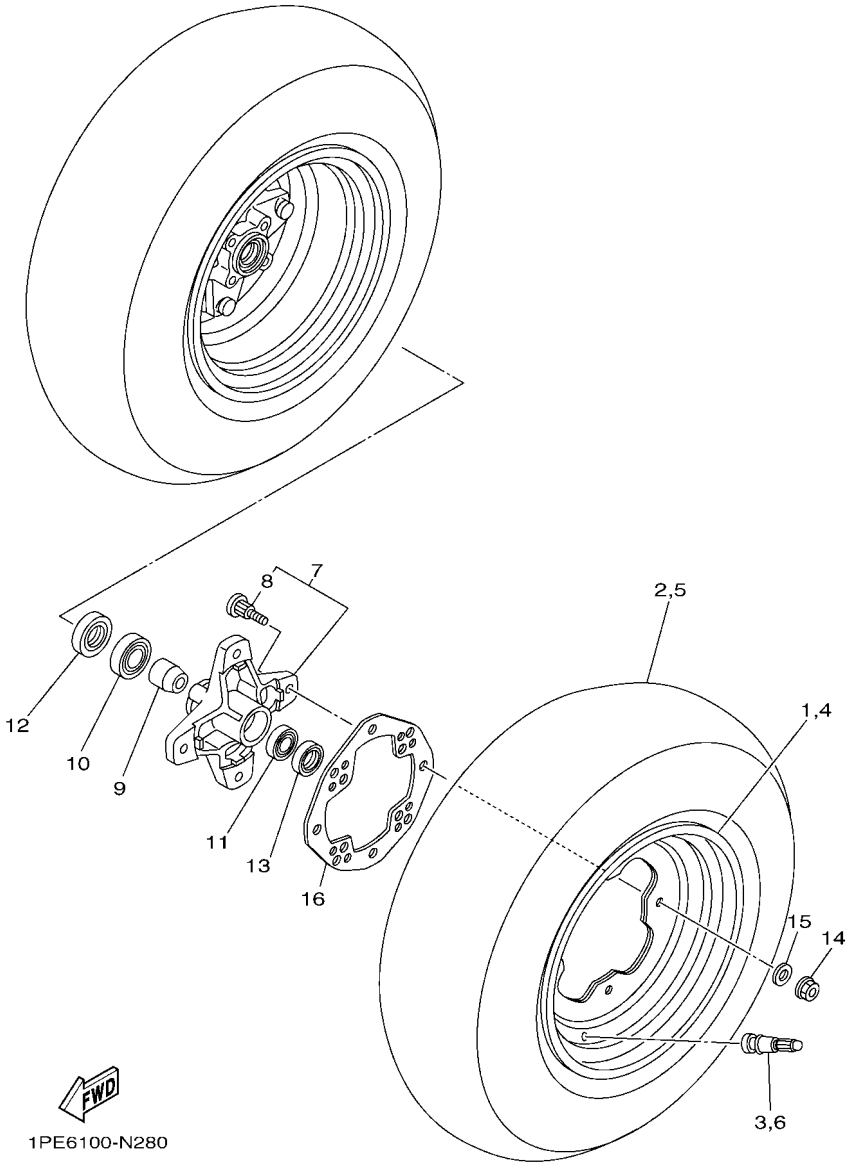

FIG. 28 FRONT WHEEL

REF. NO.	PART NO.	DESCRIPTION	2LSL					REMARKS
1	1TD–F5180–11	WHEEL COMP.	1					
2	94107–10803	TIRE (AT22X7-10 MS13**TL)	1					MAXXIS
3	93900–00813	VALVE, RIM (TR413)	1					MAXXIS
4	1TD–F5180–11	WHEEL COMP.	1					
5	94107–10803	TIRE (AT22X7-10 MS13**TL)	1					MAXXIS
6	93900–00813	VALVE, RIM (TR413)	1					MAXXIS
7	1PE–F510D–00	HUB ASSY 2	2					
8	90114–10006	.BOLT, SERRATION	4					
9	5LP–25117–00	SPACER, BEARING	2					
10	93306–00446	BEARING	2					
11	93306–20231	BEARING	2					
12	93105–26026	OIL SEAL	2					
13	93102–22216	OIL SEAL	2					
14	95702–10500	NUT, FLANGE	8					
15	92902–10200	WASHER	8					
16	1S3–25127–01	COVER, PLATE	2					

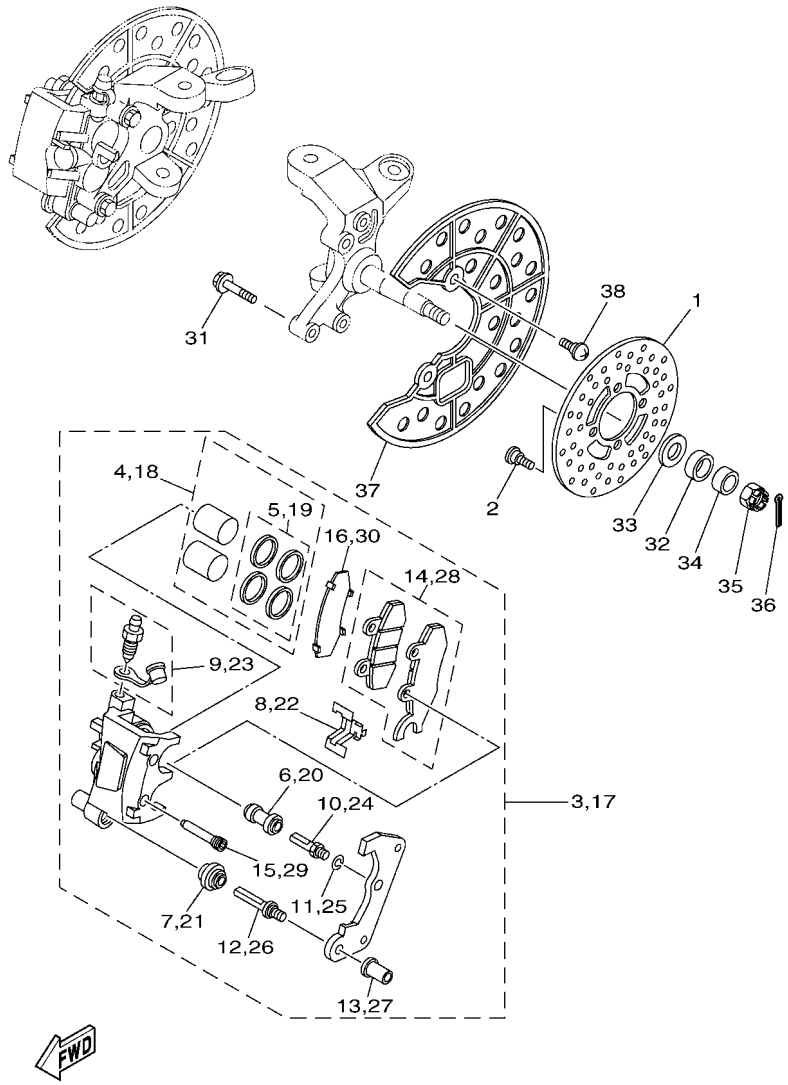

FIG. 29 FRONT BRAKE CALIPER

REF. NO.	PART NO.	DESCRIPTION	2LSL					REMARKS
1	4XE–F582T–11	DISC, BRAKE (LEFT)	2					
2	90109–08082	BOLT	8					
3	1S3–2580T–01	CALIPER ASSY (LEFT)	1					
4	5TG–W0057–00	.PISTON ASSY, CALIPER	1					
5	3LC–W0047–50	..CALIPER SEAL KIT	1					
6	1UY–25937–51	.BOOT 2	1					
7	3JD–25917–00	.BOOT, CALIPER	1					
8	3JD–25919–00	.SUPPORT, PAD	1					
9	1UY–W0048–50	.BLEED SCREW KIT	1					
10	1UY–25926–51	.BOLT	1					
11	1UY–25938–51	.WASHER, SPRING	1					
12	3JD–25926–00	.BOLT	1					
13	3JD–25961–00	.NUT	1					
14	1S3–W0045–00	.BRAKE PAD KIT	1					LH
15	5TG–25924–00	.PIN, PAD	2					
16	1S3–25828–00	.SHIM, CALIPER	1					
17	1S3–2580U–01	CALIPER ASSY (RIGHT)	1					
18	5TG–W0057–00	.PISTON ASSY, CALIPER	1					
19	3LC–W0047–50	..CALIPER SEAL KIT	1					
20	1UY–25937–51	.BOOT 2	1					
21	3JD–25917–00	.BOOT, CALIPER	1					
22	3JD–25919–00	.SUPPORT, PAD	1					
23	1UY–W0048–50	.BLEED SCREW KIT	1					
24	1UY–25926–51	.BOLT	1					
25	1UY–25938–51	.WASHER, SPRING	1					
26	3JD–25926–00	.BOLT	1					
27	3JD–25961–00	.NUT	1					

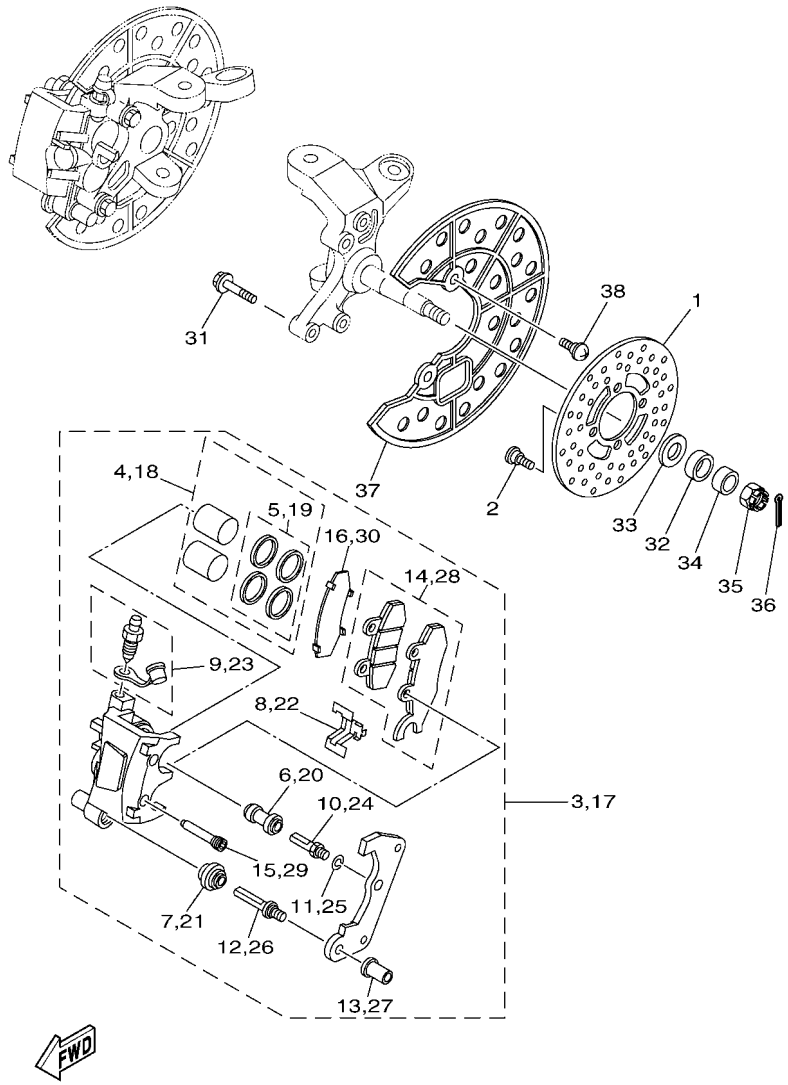

FIG. 29 FRONT BRAKE CALIPER

REF. NO.	PART NO.	DESCRIPTION	2LSL					REMARKS
28	1S3–W0045–10	.BRAKE PAD KIT	1					RH
29	5TG–25924–00	.PIN, PAD	2					
30	1S3–25828–00	.SHIM, CALIPER	1					
31	90105–08184	BOLT, FLANGE	4					
32	90387–20005	COLLAR	2					
33	90201–20022	WASHER, PLATE	2					
34	90387–150R1	COLLAR	2					
35	90171–14002	NUT, CASTLE	2					
36	91402–30025	PIN, COTTER	2					
37	5TG–2514A–00	RING, WHEEL 1	2					
38	90149–06117	SCREW	4					

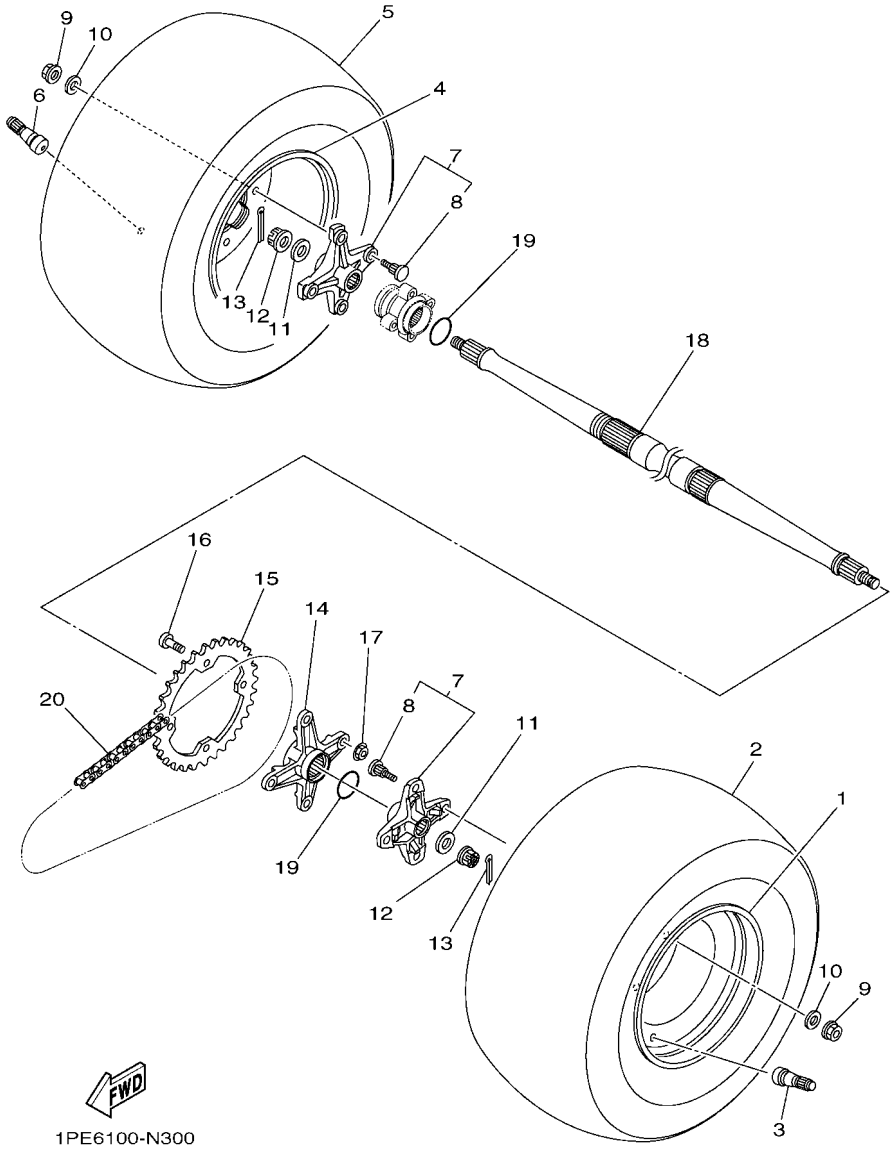

FIG. 30 REAR WHEEL

REF. NO.	PART NO.	DESCRIPTION	2LSL					REMARKS
1	1TD–F5390–11	REAR WHEEL COMP.	1					
2	94110–09801	TIRE (AT20X10-9 M976Y)	1					MAXXIS
3	93900–00813	VALVE, RIM (TR413)	1					MAXXIS
4	1TD–F5390–11	REAR WHEEL COMP.	1					
5	94110–09801	TIRE (AT20X10-9 M976Y)	1					MAXXIS
6	93900–00813	VALVE, RIM (TR413)	1					MAXXIS
7	1PE–F53K0–00	WHEEL SHAFT COLLAR ASSY	2					
8	90114–10020	.BOLT, SERRATION	4					
9	95702–10500	NUT, FLANGE	8					
10	92902–10200	WASHER	8					
11	90201–16023	WASHER, PLATE	2					
12	90171–16002	NUT, CASTLE	2					
13	90252–03001	PIN, COTTER	2					
14	1PE–F5386–00	COLLAR, SPROCKET AXLE	1					
15	5TG–25438–10	SPROCKET, DRIVEN (38T)	1					
16	90109–10013	BOLT	4					
17	90185–10011	NUT, SELF-LOCKING	4					
18	1S3–25381–10	AXLE, WHEEL	1					
19	93210–36769	O-RING	2					
20	94568–H6098	CHAIN (DID520VP2-T)	1					

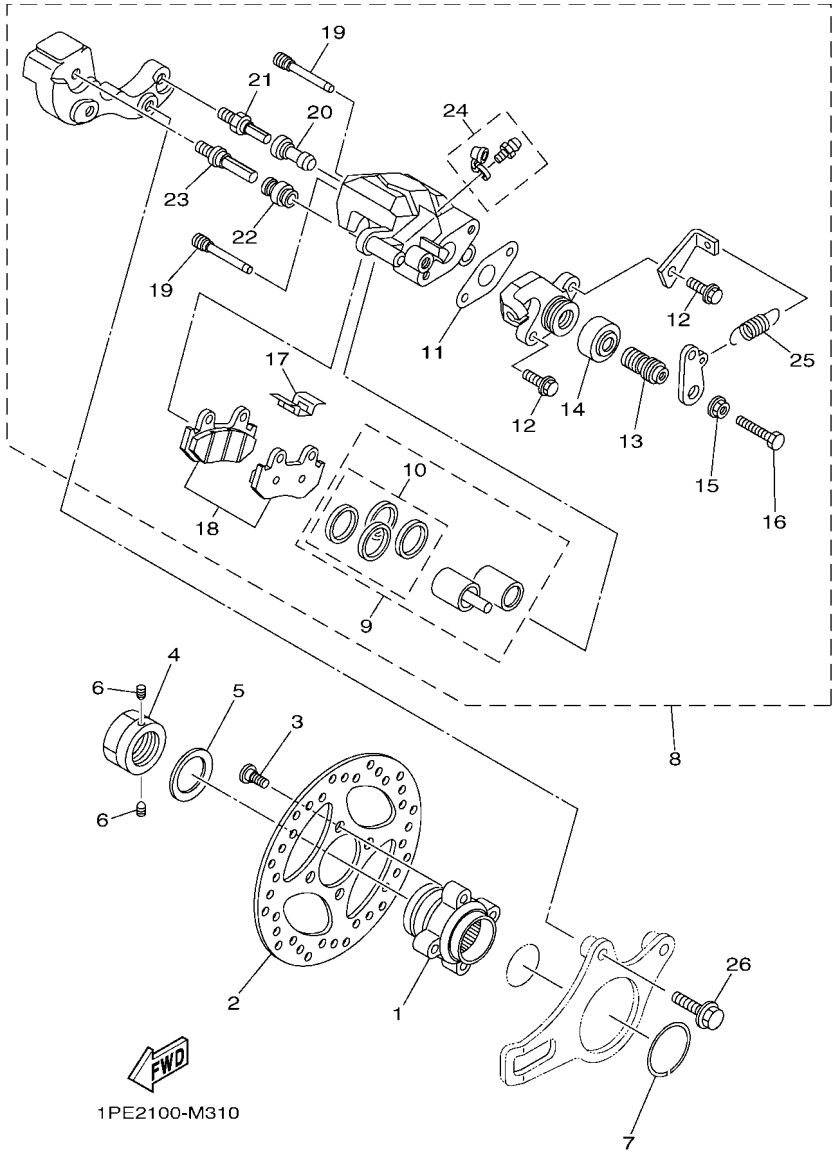

FIG. 31 REAR BRAKE CALIPER

REF. NO.	PART NO.	DESCRIPTION	2LSL					REMARKS
1	1PE–F5712–00	BRACKET, DISC	1					
2	1PE–F582W–00	DISK, REAR BRAKE 2	1					
3	90109–08076	BOLT	4					
4	90179–36003	NUT	1					
5	90208–37001	WASHER, CONICAL SPRING	1					
6	90113–06055	BOLT, SET	2					
7	1S3–25415–00	CIRCLIP	1					
8	5TG–2580W–21	CALIPER ASSY, REAR 2	1					
9	5TG–W0057–10	.PISTON ASSY, CALIPER	1					
10	5TG–W0047–00	..CALIPER SEAL KIT	1					
11	5TG–25975–00	.RUBBER, BUSHING	1					
12	5UG–25833–00	.BOLT, FITTING	2					
13	5TG–25978–00	.SHAFT L	1					
14	1UY–25974–51	.BOOT	1					
15	1UY–25973–51	.NUT	1					
16	5TG–25972–00	.ADJUST BOLT	1					
17	3LD–25934–01	.SPRING, PAD	1					
18	5TG–W0046–10	.BRAKE PAD KIT 2	1					
19	5DH–25933–00	.PIN, PAD	2					
20	1UY–25937–51	.BOOT 2	1					
21	3SP–25914–51	.PIN, SLIDE	1					
22	3JD–25917–00	.BOOT, CALIPER	1					
23	3SP–25926–51	.BOLT	1					
24	1UY–W0048–50	.BLEED SCREW KIT	1					
25	5TG–25977–50	.SPRING, RETURN	1					
26	90105–10405	BOLT, FLANGE	2					

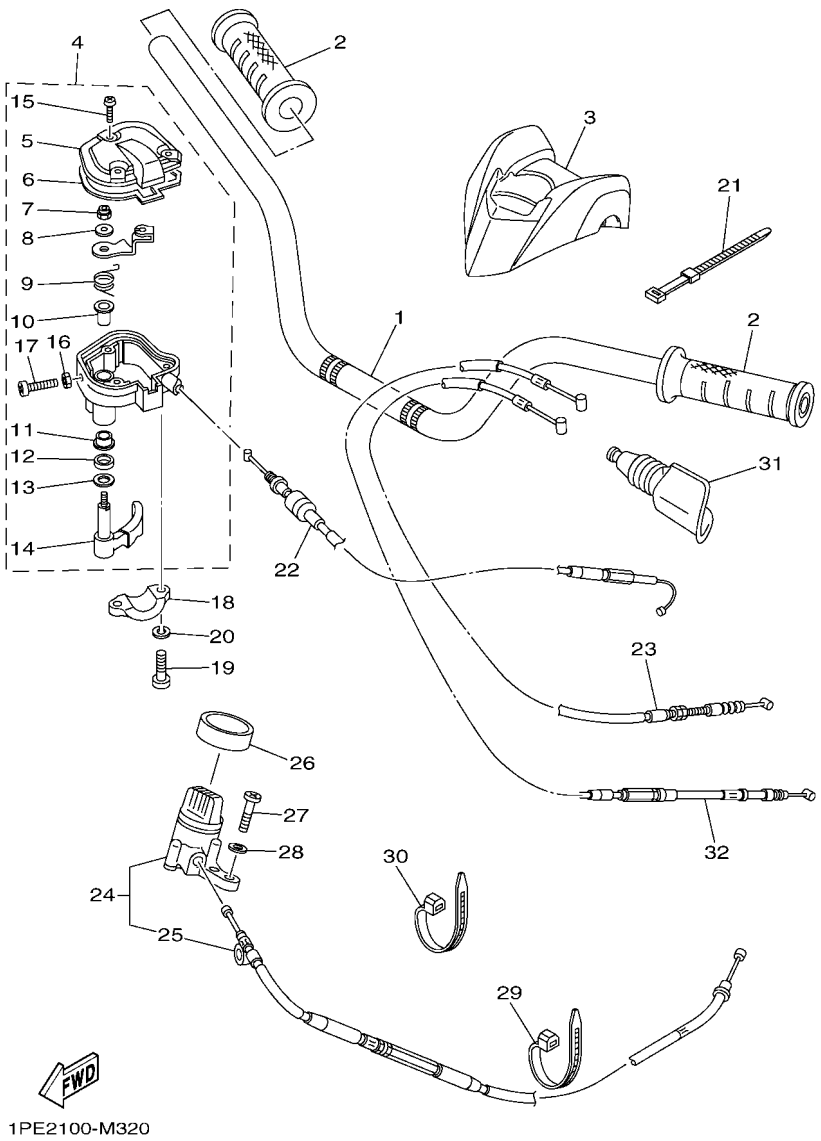

FIG. 32 STEERING HANDLE & CABLE

REF. NO.	PART NO.	DESCRIPTION	2LSL					REMARKS
1	1PE–F6111–00	HANDLEBAR	1					
2	5FU–F6241–10	GRIP	2					
3	1PE–F6124–00	PROTECTOR, HANDLEBAR	1					
4	1S3–26250–00	THROTTLE LEVER ASSY	1					
5	1S3–2628F–00	.CAP, GEAR	1					
6	1S3–2628G–00	.GASKET	1					
7	95602–05100	.NUT, U	1					
8	1NV–26398–00	.WASHER	1					
9	1NV–26304–00	.SPRING	1					
10	1NV–26259–01	.COLLAR	1					
11	1NV–2625K–00	.COLLAR	1					
12	93104–09025	.OIL SEAL	1					
13	1NV–26129–00	.WASHER	1					
14	1S3–2625G–00	.LEVER, THROTTLE	1					
15	90149–04278	.SCREW	3					
16	95302–05700	.NUT, HEXAGON	1					
17	98502–05020	.SCREW, PAN HEAD	1					
18	1S3–82913–00	HOLDER, LEVER LOWER 1	1					
19	98502–05020	SCREW, PAN HEAD	2					
20	92902–05100	WASHER, SPRING	2					
21	437–83936–01	BAND, SWITCH CORD	4					
22	1S3–26311–11	CABLE, THROTTLE 1	1					
23	1S3–26335–01	CABLE, CLUTCH	1					
24	1S3–26150–10	REV. LEVER ASSY.	1					
25	1S3–2637E–11	.CABLE, CONTROL 1	1					
26	1S3–26113–00	DAMPER	1					
27	98502–05018	SCREW, PAN HEAD	2					

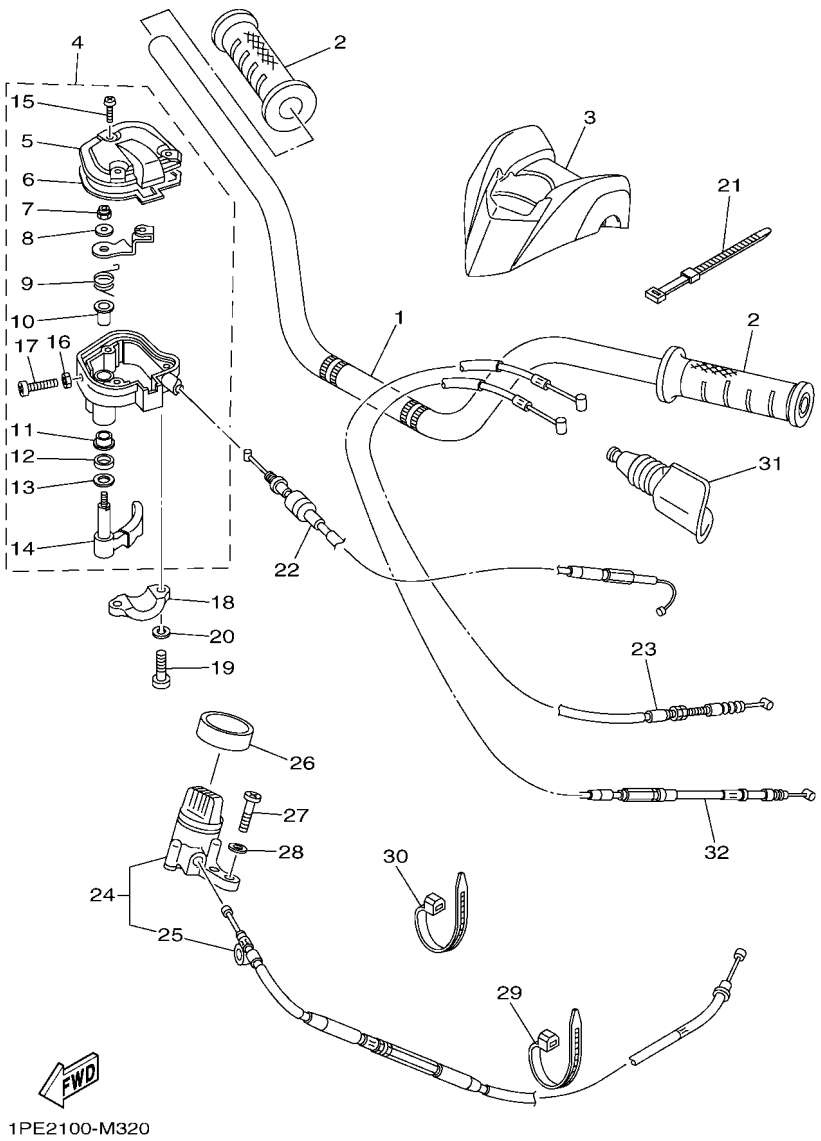

FIG. 32 STEERING HANDLE & CABLE

REF. NO.	PART NO.	DESCRIPTION	2LSL					REMARKS
28	92902–05600	WASHER, PLATE	2					
29	90464–13073	CLAMP	1					(125.0x7.0)
30	90464–12045	CLAMP	1					
31	31A–26372–00	COVER, HANDLE LEVER 1	1					
32	1PE–26341–00	WIRE, BRAKE 1	1					

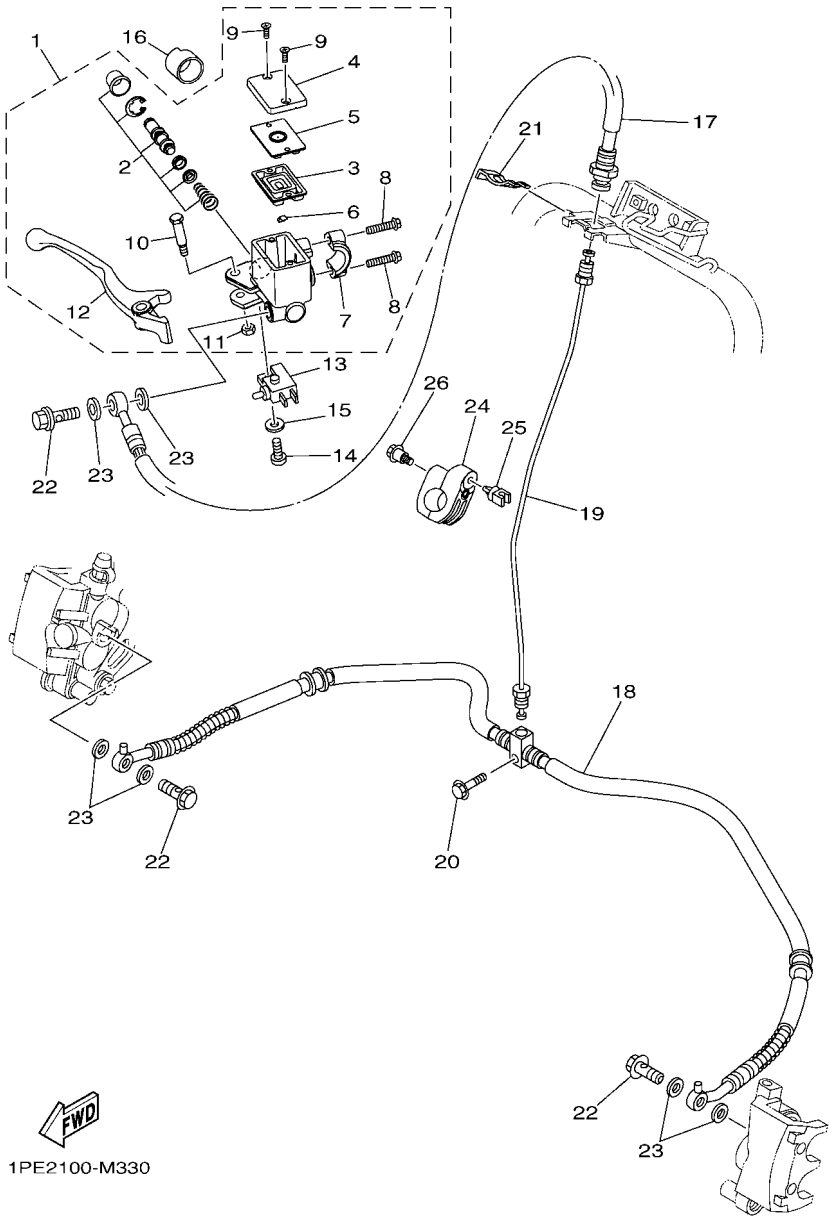

FIG. 33 FRONT MASTER CYLINDER

REF. NO.	PART NO.	DESCRIPTION	2LSL					REMARKS
1	1PE–2583T–00	MASTER CYLINDER ASSY	1					
2	1PE–25807–00	.CYLINDER KIT, MASTER	1					
3	1HP–25854–00	.DIAPHRAGM, RESERVOIR	1					
4	1HP–25852–00	.CAP, RESERVOIR	1					
5	1HP–2585B–00	.PLATE, DIAPHRAGM	1					
6	1HP–25889–00	.SEPARATOR	1					
7	1HP–25867–00	.BRACKET, MASTER CYLINDER	1					
8	1HP–26332–00	.BOLT	2					
9	98780–04012	.SCREW, FLAT HEAD	2					
10	1HP–2589F–10	.BOLT, LEVER	1					
11	95702–06500	.NUT, FLANGE	1					
12	1PE–83922–00	.LEVER 2	1					
13	1HP–83980–01	FRONT STOP SWITCH ASSY	1					
14	98502–04012	SCREW, PAN HEAD	1					
15	92902–04600	WASHER, PLATE	1					
16	1UY–26259–00	COLLAR	1					
17	1PE–F5872–00	HOSE, BRAKE 1	1					
18	5TG–25873–20	HOSE, BRAKE 2	1					
19	1PE–F5871–00	PIPE, BRAKE	1					
20	95822–06025	BOLT, FLANGE	1					
21	2GU–25866–00	CIRCLIP	1					
22	90401–10015	BOLT, UNION	3					
23	90201–10118	WASHER, PLATE	6					
24	1AS–25522–00	HOLDER	1					
25	5KM–81677–00	CLAMP 1	1					
26	90109–06241	BOLT	1					

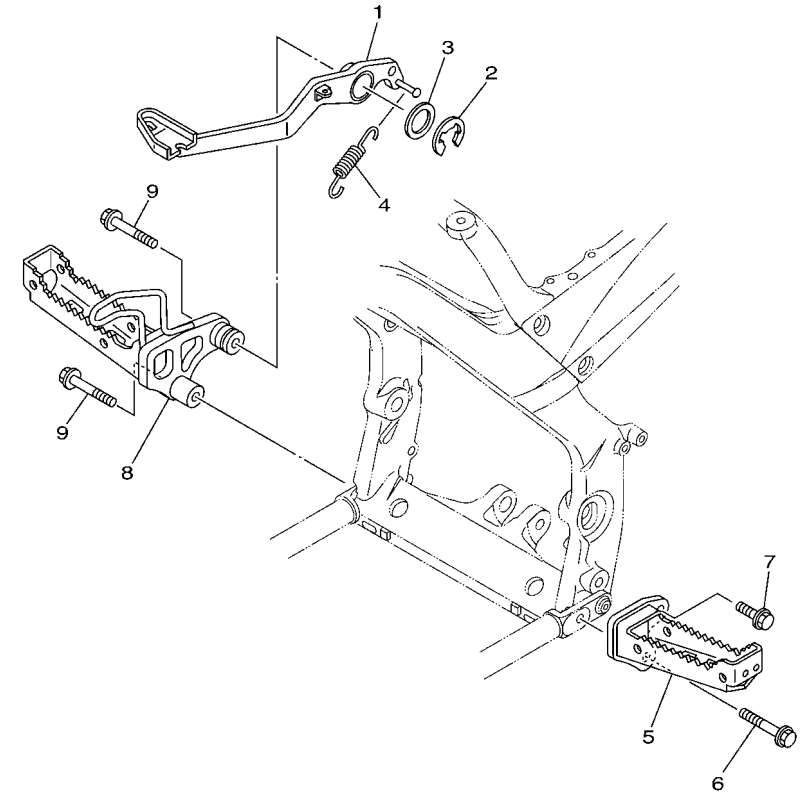

1S31100-E340

FIG. 34 STAND & FOOTREST

REF. NO.	PART NO.	DESCRIPTION	2LSL					REMARKS
1	1PE–F7211–00	PEDAL, BRAKE	1					
2	93430–23054	CIRCLIP	1					
3	90201–266F6	WASHER, PLATE	1					
4	90506–20026	SPRING, TENSION	1					
5	1PE–F7411–00	FOOTREST 1	1					
6	90105–10294	BOLT, FLANGE	1					
7	95812–10030	BOLT, FLANGE	1					
8	1PE–F7421–00	FOOTREST 2	1					
9	90105–10294	BOLT, FLANGE	2					

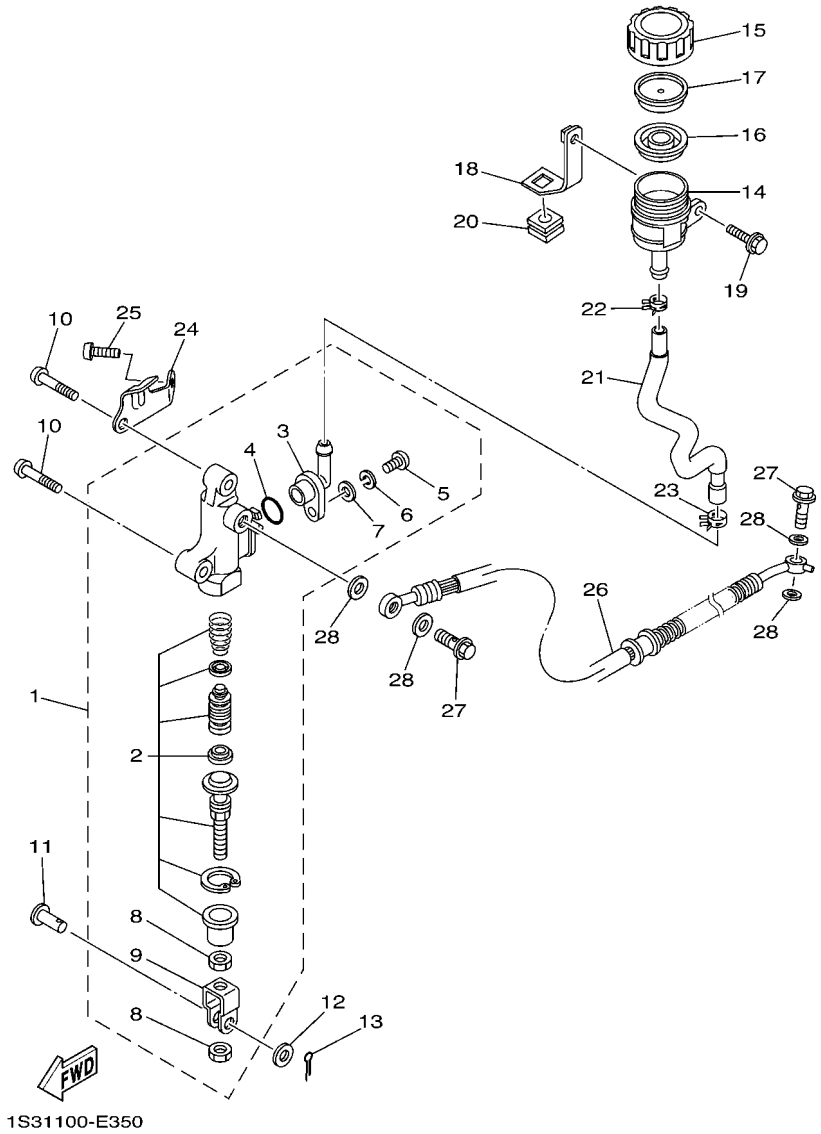

FIG. 35 REAR MASTER CYLINDER

REF. NO.	PART NO.	DESCRIPTION	2LSL					REMARKS
1	1S3–2580E–00	REAR MASTER CYLINDER ASSY	1					
2	1S3–W0042–50	.CYLINDER KIT, MASTER	1					
3	1AE–2582A–00	.JOINT	1					
4	93210–15620	.O-RING	1					
5	98506–04012	.SCREW, PAN HEAD	1					
6	92906–04100	.WASHER, SPRING	1					
7	92906–04600	.WASHER, PLATE	1					
8	4SS–27218–00	.NUT	2					
9	2YK–27222–00	.JOINT	1					
10	92012–08035	BOLT, BUTTON HEAD	2					
11	90240–08005	PIN, CLEVIS	1					
12	90201–08083	WASHER, PLATE	1					
13	91401–16012	PIN, COTTER	1					
14	5JJ–25894–01	TANK, RESERVOIR	1					
15	3XP–25852–50	CAP, RESERVOIR	1					
16	2VN–25854–00	DIAPHRAGM, RESERVOIR	1					
17	2VN–25855–00	BUSH,DIAPHRAGM	1					
18	1S3–26292–00	STAY	1					
19	90119–06137	BOLT, WITH WASHER	1					
20	90480–15009	GROMMET	1					
21	1PE–F5895–00	HOSE, RESERVOIR	1					
22	90467–11044	CLIP	1					
23	90467–14057	CLIP	1					
24	1S3–27453–01	COVER 1	1					
25	92012–08016	BOLT, BUTTON HEAD	1					
26	1PE–F5874–00	HOSE, BRAKE	1					
27	90401–10015	BOLT, UNION	2					

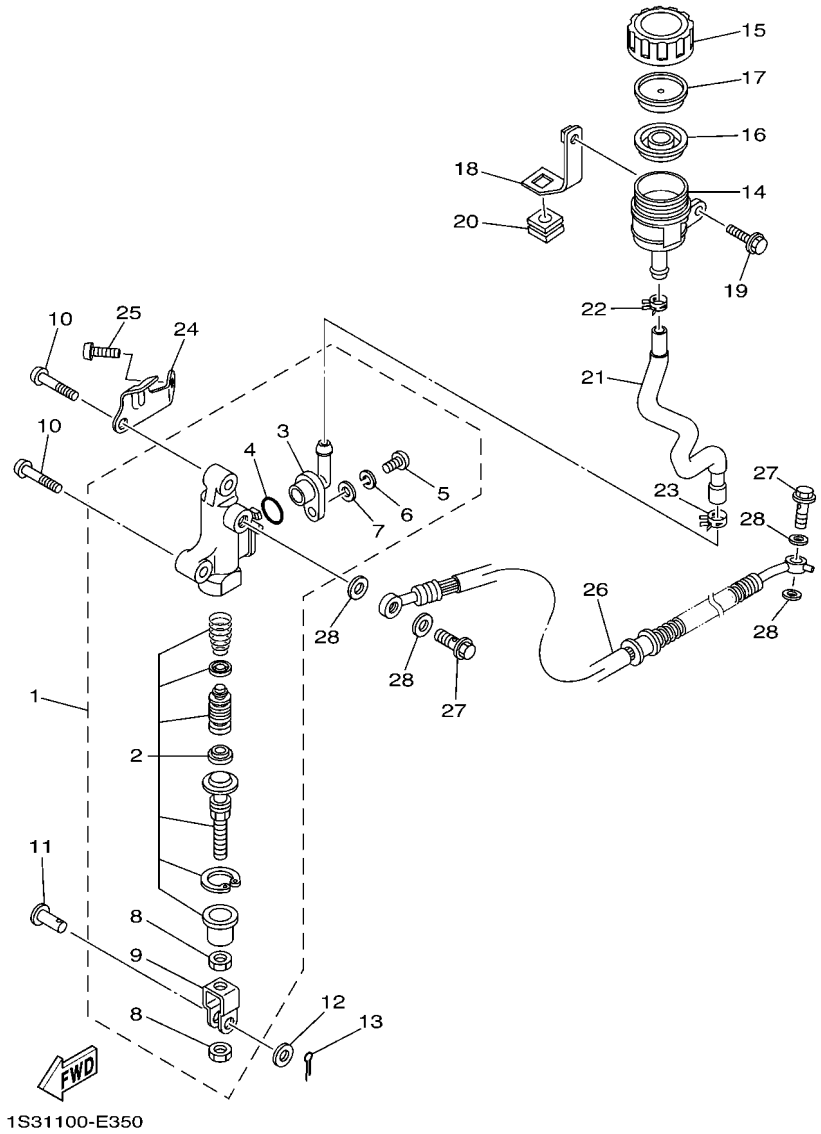

FIG. 35 REAR MASTER CYLINDER

REF. NO.	PART NO.	DESCRIPTION	2LSL					REMARKS
28	90201–10118	WASHER, PLATE	4					

FIG. 36 GUARD

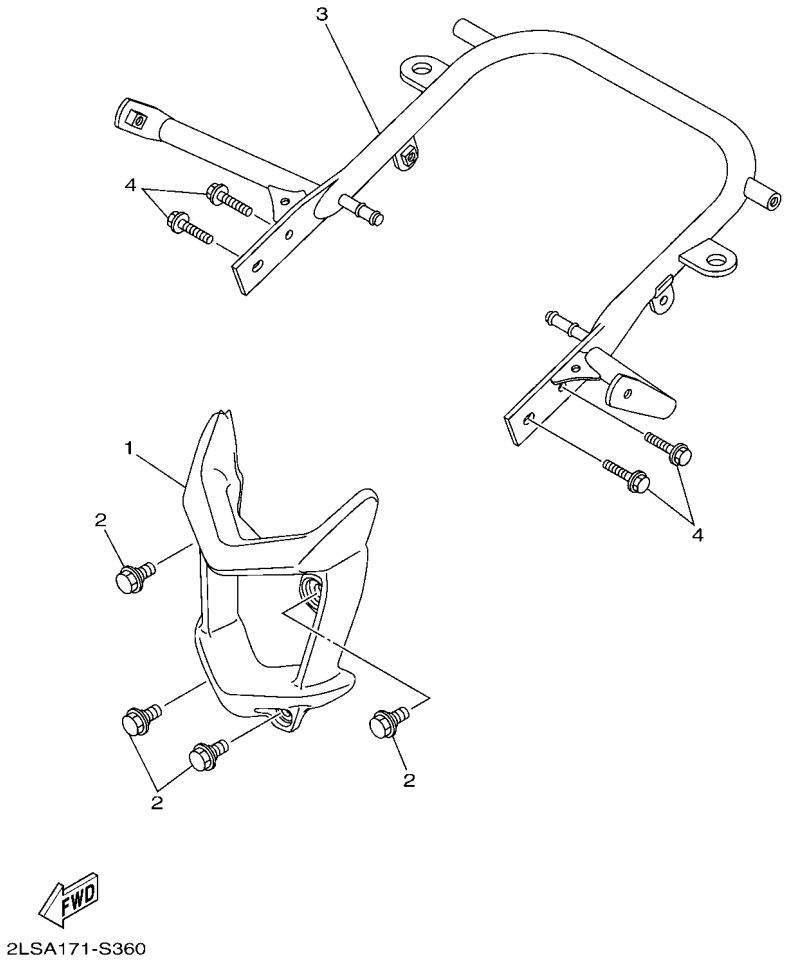

REF. NO.	PART NO.	DESCRIPTION	2LSL					REMARKS
1	1PE–F845N–00	BAR, CARRY FRONT	1					
2	90109–08100	BOLT	4					
3	2LS–F845R–11	BAR, CARRY REAR	1					
4	90105–08142	BOLT, FLANGE	4					

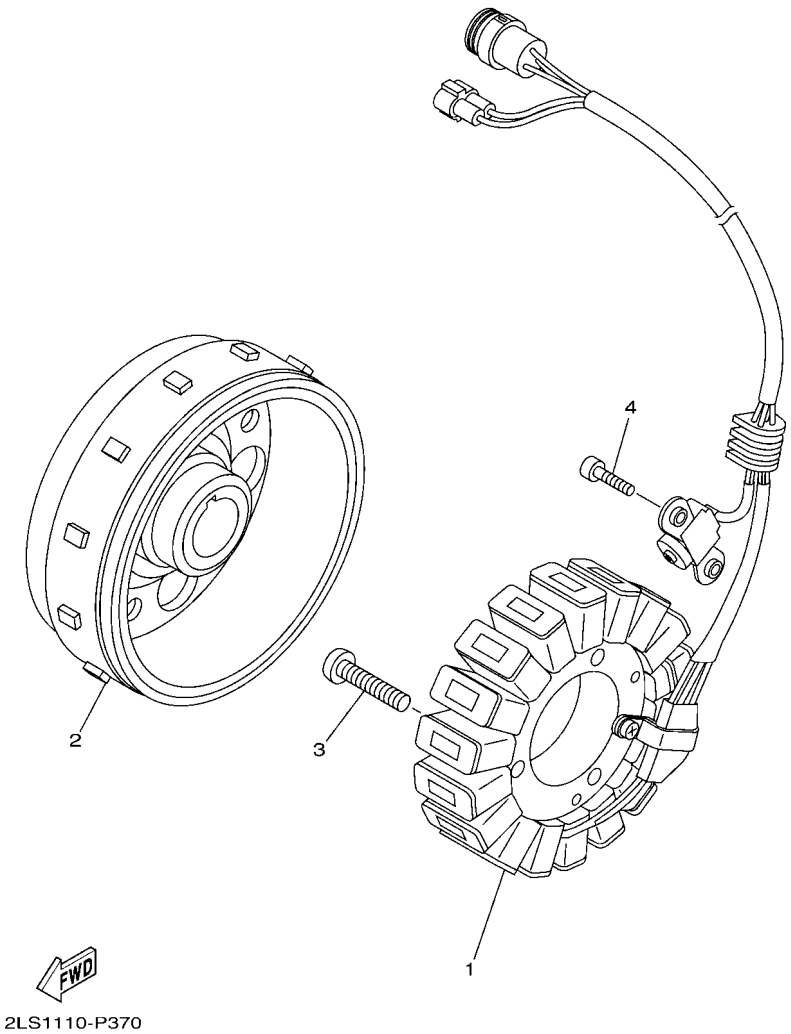

FIG. 37 GENERATOR

REF. NO.	PART NO.	DESCRIPTION	2LSL					REMARKS
1	1S3–81410–00	STATOR ASSY	1					
2	2LS–81450–00	ROTOR ASSY	1					
3	92012–06030	BOLT, BUTTON HEAD	3					
4	90110–05031	BOLT, HEXAGON SOCKET HEAD	2					

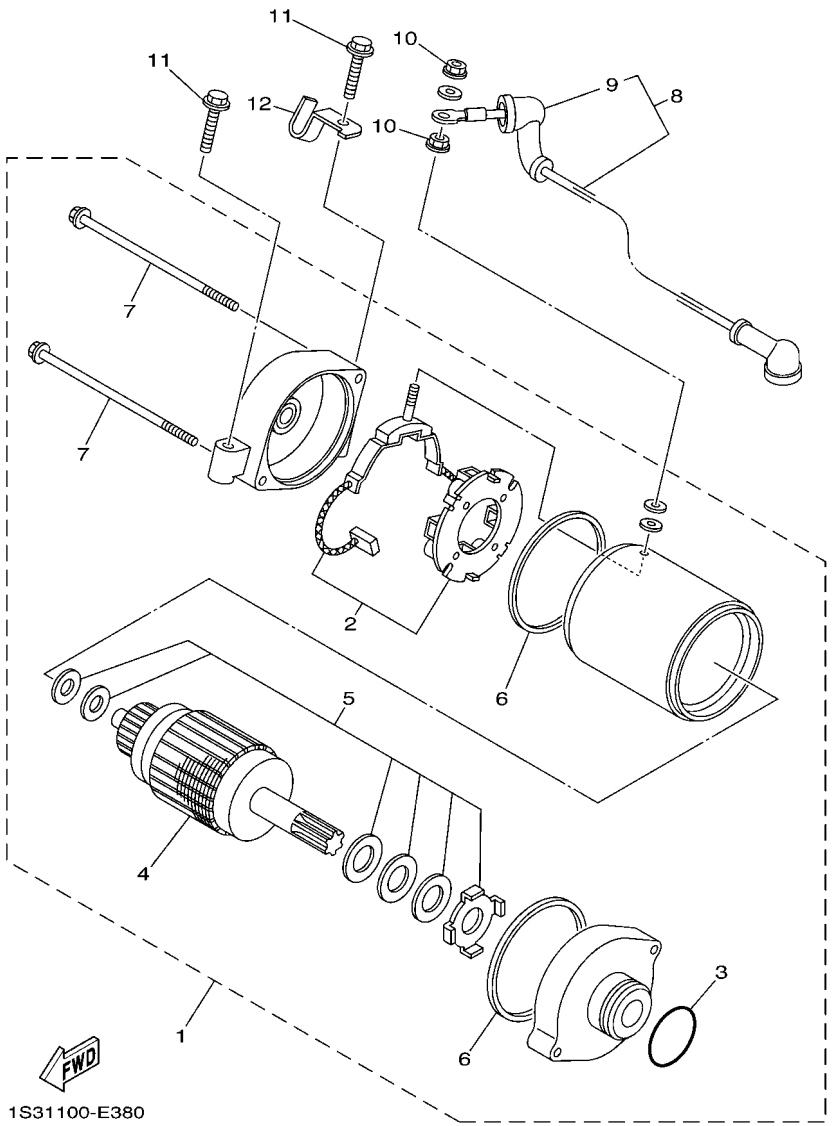

FIG. 38 STARTING MOTOR

REF. NO.	PART NO.	DESCRIPTION	2LSL					REMARKS
1	1S3–81890–00	MOTOR ASSY	1					
2	3AJ–81801–00	.BRUSH SET	1					
3	1FK–81847–00	.O-RING	1					
4	4NK–81850–00	.ARMATURE ASSY	1					
5	3KS–81809–00	.WASHER KIT	1					
6	11H–81844–00	.GASKET	2					
7	3AJ–81826–00	.BOLT	2					
8	1S3–81815–01	CORD, STARTER MOTOR	1					
9	4G0–81871–00	.CAP	1					
10	4XV–8182A–00	NUT	2					
11	95812–06030	BOLT, FLANGE	2					
12	1S3–15484–00	CLAMP 2	1					

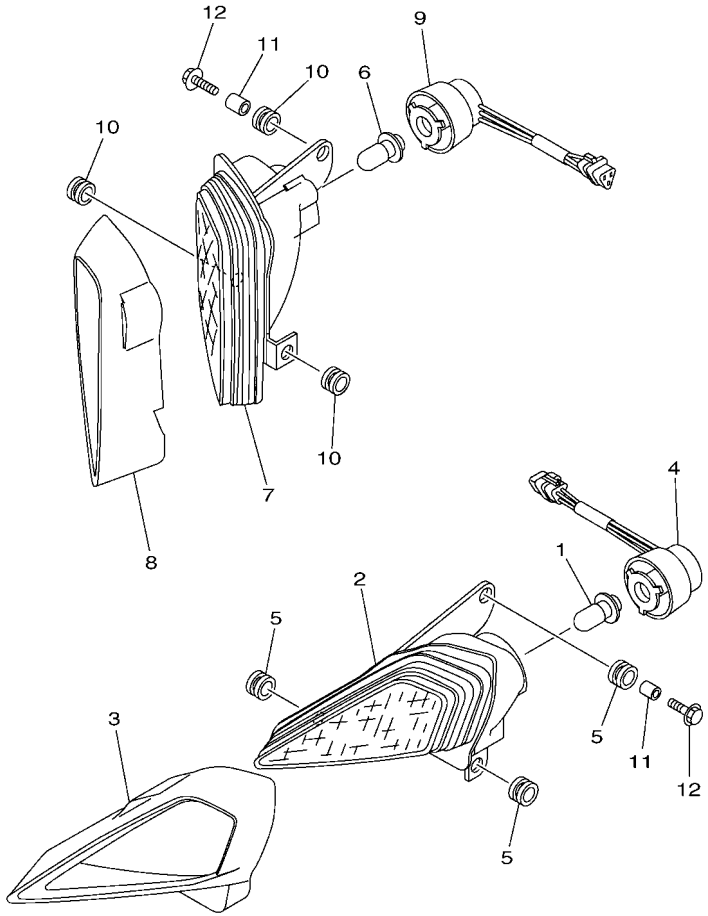

1PE2100-M390

FIG. 39 HEADLIGHT

REF. NO.	PART NO.	DESCRIPTION	2LSL					REMARKS
1	4KB–84314–01	BULB (12V-30/30W)	1					
2	5TG–84110–03	HEADLIGHT UNIT ASSY	1					
3	5TG–84165–01	RIM, HEADLIGHT COVER 1	1					
4	5TG–84140–01	SOCKET CORD ASSY	1					
5	90480–14102	GROMMET	3					
6	4KB–84314–01	BULB (12V-30/30W)	1					
7	5TG–84310–03	HEADLIGHT UNIT ASSY	1					
8	5TG–84166–01	RIM, HEADLIGHT COVER 2	1					
9	5TG–84340–01	SOCKET CORD ASSY 1	1					
10	90480–14102	GROMMET	3					
11	90387–06136	COLLAR	2					
12	95812–06025	BOLT, FLANGE	2					

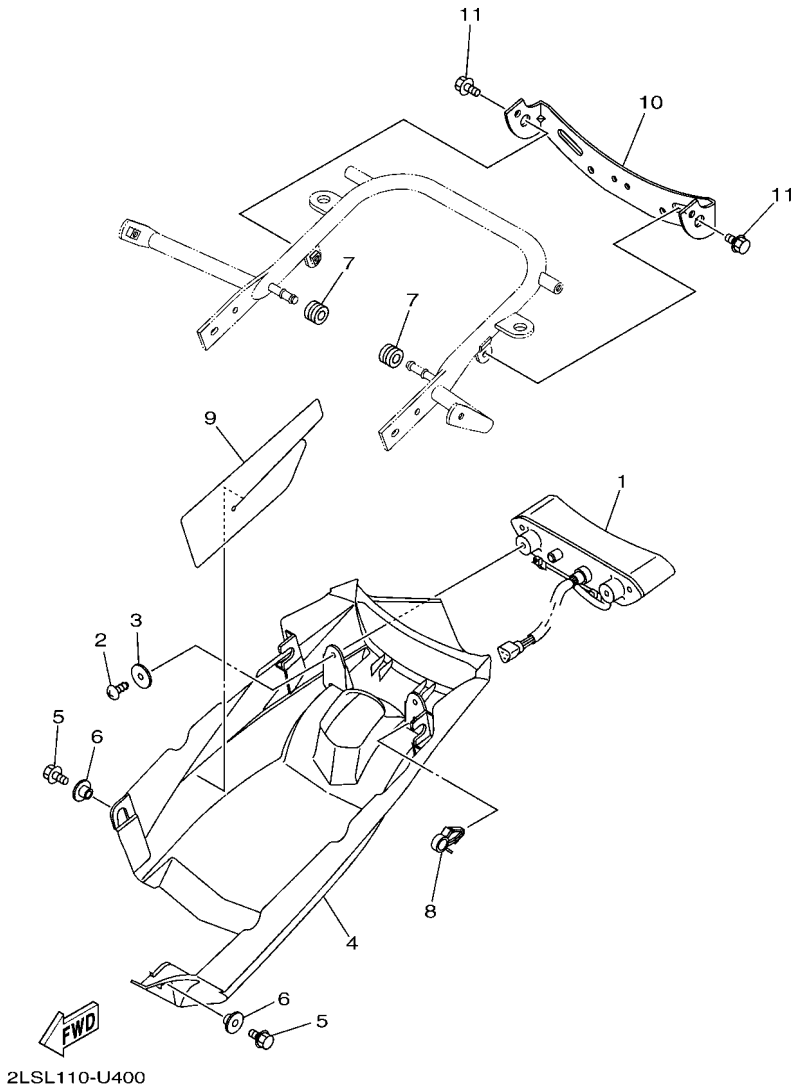

FIG. 40 TAILLIGHT

REF. NO.	PART NO.	DESCRIPTION	2LSL					REMARKS
1	1S3–84710–10	TAILLIGHT UNIT ASSY	1					
2	97702–50016	SCREW, TAPPING	2					
3	90201–05025	WASHER, PLATE	2					
4	1PE–H4716–00	COVER, TAILLIGHT	1					
5	95802–06010	BOLT, FLANGE	2					
6	90387–06153	COLLAR	2					
7	90480–14101	GROMMET	2					
8	90464–15157	CLAMP	1					
9	1S3–84736–00	DAMPER, TAIL 1	1					
10	1PE–H4703–01	BRACKET	1					
11	95802–06010	BOLT, FLANGE	2					

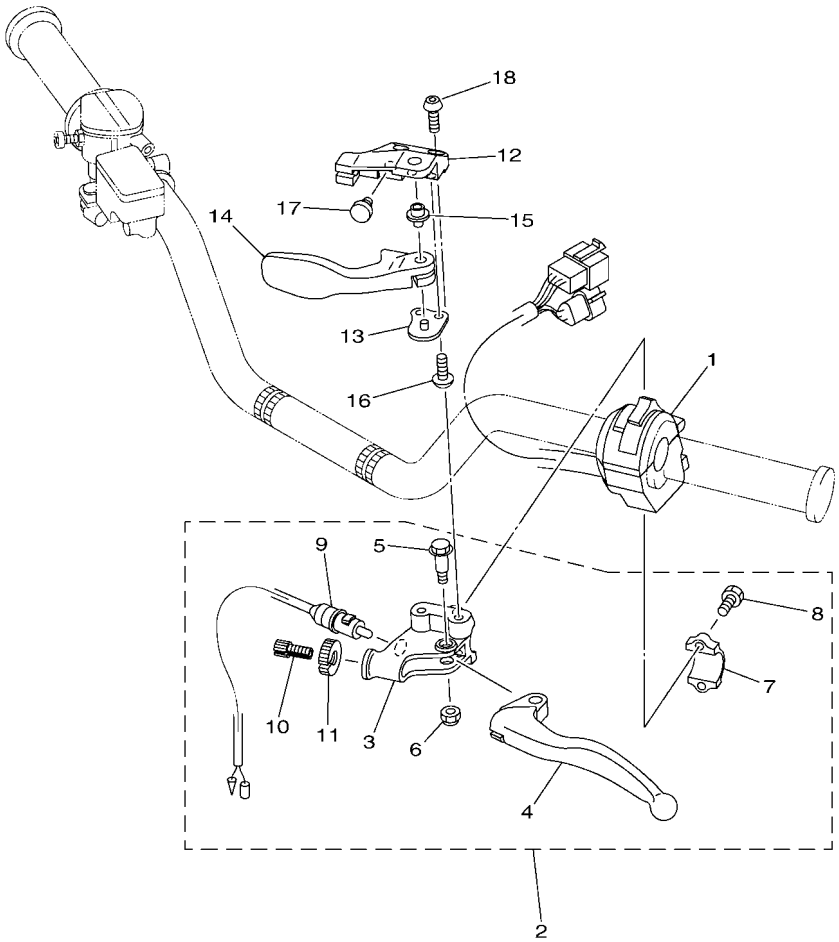

1PE2100-M420

FIG. 41 HANDLE SWITCH & LEVER

REF. NO.	PART NO.	DESCRIPTION	2LSL					REMARKS
1	1S3–83973–11	SWITCH, HANDLE 3	1					
2	5YT–82910–11	LEVER HOLDER ASSY (LEFT)	1					
3	5YT–82911–10	.HOLDER, LEVER 1	1					
4	2HT–83912–01	.LEVER 1	1					
5	90109–06798	.BOLT	1					
6	95602–06100	.NUT, S/L	1					
7	5TG–82913–00	.HOLDER, LEVER LOWER 1	1					
8	97002–05016	.BOLT	2					
9	5KM–82917–00	.SWITCH	1					
10	90123–08046	.BOLT	1					
11	90179–08148	.NUT	1					
12	5TG–25727–01	BRACKET, LEVER	1					
13	5D3–25689–00	PLATE, GUIDE	1					
14	5TG–25726–01	LEVER, BRAKE	1					
15	5TG–83923–00	COLLAR, LEVER 2	1					
16	92012–06014	BOLT, BUTTON HEAD	2					
17	90338–07007	PLUG	1					
18	92012–06016	BOLT, BUTTON HEAD	2					

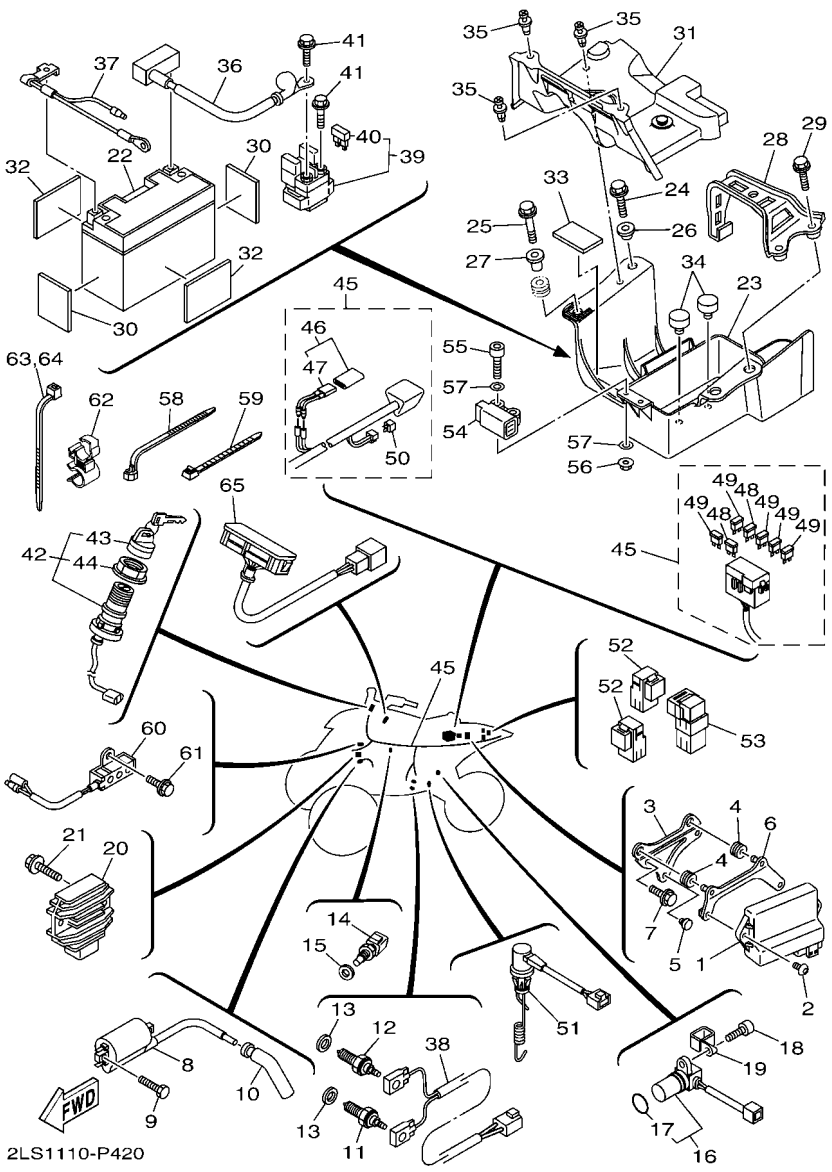

FIG. 42 ELECTRICAL 1

REF. NO.	PART NO.	DESCRIPTION	2LSL					REMARKS
1	2LS–8591A–10	ENGINE CONTROL UNIT ASSY	1					
2	92012–06010	BOLT, BUTTON HEAD	2					
3	2LS–F1274–00	BRACKET, C.D.I. UNIT	1					
4	90480–11224	GROMMET	2					
5	90338–07007	PLUG	1					
6	2LS–2830X–00	BRKT., CONTROL UNIT	1					
7	95812–06016	BOLT, FLANGE	2					
8	3TB–82310–00	IGNITION COIL ASSY	1					
9	97002–05020	BOLT	2					
10	5VK–82370–00	PLUG CAP ASSY	1					
11	5LP–82540–01	NEUTRAL SWITCH ASSY	1					
12	3GB–82540–01	NEUTRAL SWITCH ASSY	1					
13	90430–10148	GASKET	2					
14	5YP–85790–00	THERMOSENSOR ASSY	1					
15	90430–12202	GASKET	1					
16	1S3–83755–01	SENSOR, SPEED	1					
17	4D9–81168–00	.O-RING	1					
18	91312–06016	BOLT, HEXAGON SOCKET HEAD	1					
19	90461–10004	CLAMP	1					
20	5BN–81960–00	RECTIFIER & REGULATOR ASSY	1					
21	95812–06025	BOLT, FLANGE	2					
22	1PE–H2100–00	BATTERY ASSY (GS GT9B-4)	1					
23	1PE–H212B–00	BOX, BATTERY 1	1					
24	90105–06084	BOLT, FLANGE	1					
25	95802–06030	BOLT, FLANGE	1					
26	90387–06153	COLLAR	1					
27	90387–063E6	COLLAR	1					

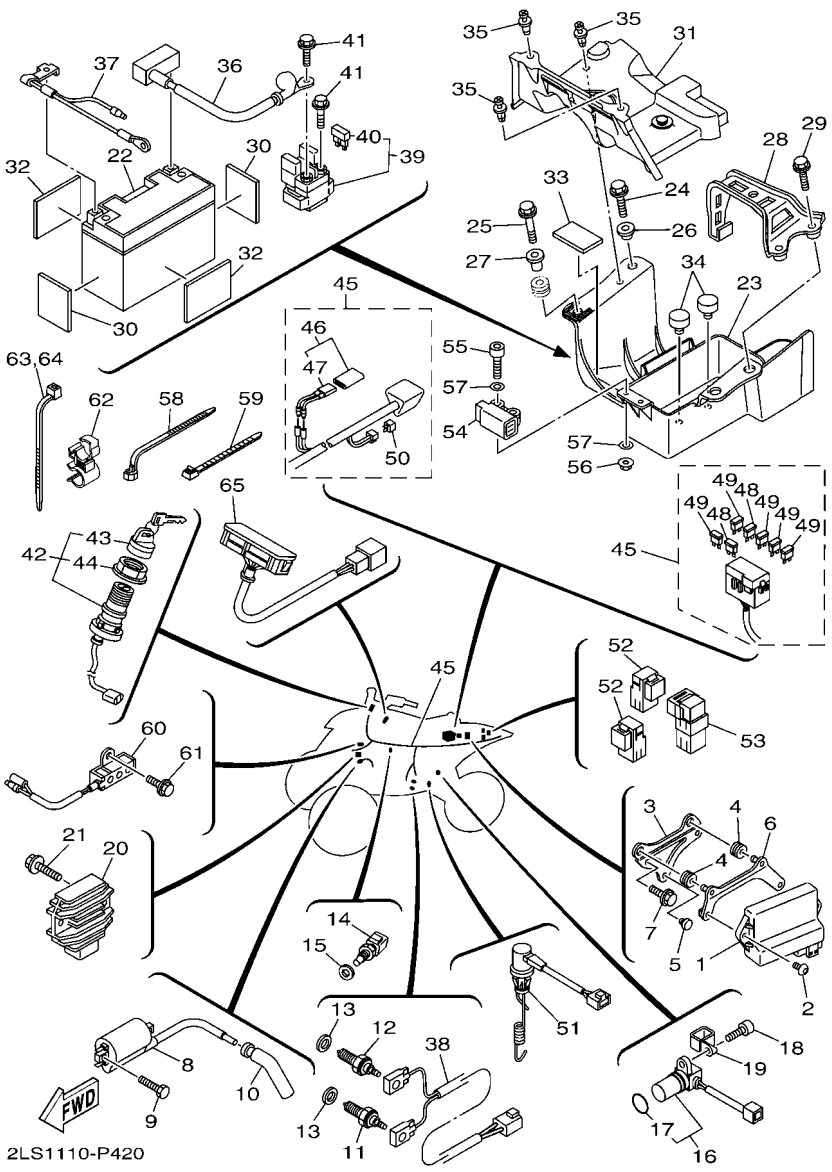

FIG. 42 ELECTRICAL 1

REF. NO.	PART NO.	DESCRIPTION	2LSL					REMARKS
28	1PE–H2128–00	BRACKET, BATTERY	1					
29	95802–06020	BOLT, FLANGE	2					
30	1S3–82123–00	SEAT, BATTERY	2					
31	1PE–H2129–00	COVER, BATTERY	1					
32	4HC–27415–00	PLATE, FOOTREST	2					
33	22F–2139X–00	DAMPER	1					
34	5TG–82121–10	PAD, BATTERY	2					
35	90269–06002	RIVET	3					
36	1PE–H2115–00	WIRE, PLUS LEAD	1					
37	1PE–H2116–00	WIRE, MINUS LEAD	1					
38	1S3–82541–00	WIRE, LEAD	1					
39	5UG–81940–00	STARTER RELAY ASSY (2768112-A)	1					
40	1AE–82151–00	.FUSE (30A-BL)	2					
41	95022–06008	BOLT, FLANGE	2					
42	4SH–82510–00	MAIN SWITCH ASSY	1					
43	3HN–82579–00	.CAP, KEY	1					
44	3HN–82569–00	.NUT, MAIN SWITCH	1					
45	2LS–82590–00	WIRE HARNESS ASSY	1					
46	3D5–82180–00	.CIRCUIT BREAKER ASSY	1					
47	3D5–82560–00	..THERMO SWITCH ASSY	1					
48	5JJ–82151–20	.FUSE (20A-BL)	2					
49	5JJ–82151–30	.FUSE (10A-BL)	5					
50	3WP–81980–00	.DIODE ASSY	1					
51	1S3–82530–10	STOP SWITCH ASSY	1					
52	1TP–81950–00	RELAY ASSY (1TP-00)	2					
53	5DM–81950–00	RELAY ASSY (G8HN-1C4T-DJ-Y52)	1					
54	5PS–82576–01	SENSOR, LEAN ANGLE	1					

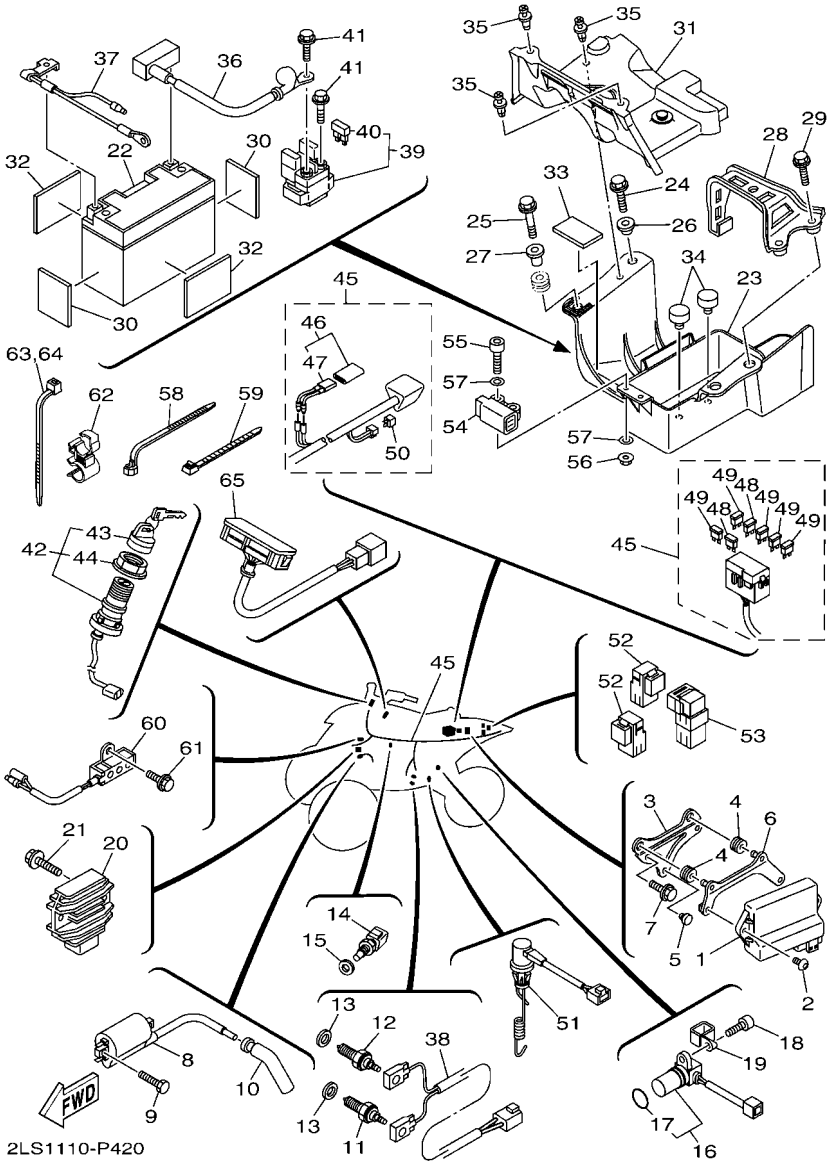

FIG. 42 ELECTRICAL 1

REF. NO.	PART NO.	DESCRIPTION	2LSL					REMARKS
55	91312–04025	BOLT, HEXAGON SOCKET HEAD	2					
56	95702–04500	NUT, FLANGE	2					
57	90201–04030	WASHER, PLATE	4					
58	90464–12045	CLAMP	1					
59	90465–13M11	CLAMP	2					
60	1S3–85370–00	RESISTOR ASSY	1					
61	95812–06010	BOLT, FLANGE	1					
62	90464–15011	CLAMP	1					
63	90465–13M11	CLAMP	1					
64	90464–40825	CLAMP	1					
65	1S3–83530–01	PILOT LIGHT ASSY	1					

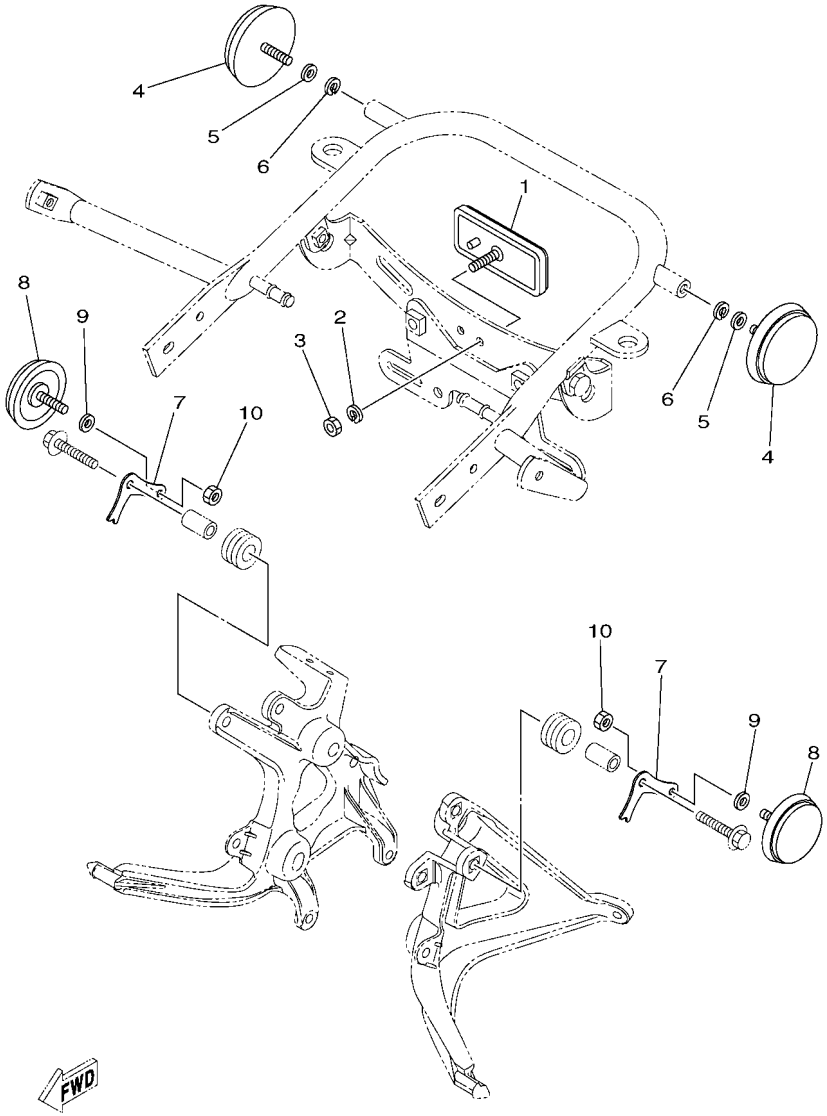

1PE2100-M440

FIG. 43 ELECTRICAL 2

REF. NO.	PART NO.	DESCRIPTION	2LSL					REMARKS
1	3Y6–85130–02	REAR REFLECTOR ASSY	1					
2	92902–05200	WASHER	1					
3	95302–05600	NUT, HEXAGON	1					
4	449–85131–02	REFLECTOR, REAR 1	2					
5	92902–05200	WASHER	2					
6	92902–05100	WASHER, SPRING	2					
7	2LS–H5112–00	BRACKET, REFLECTOR 1	1					
8	2EK–85111–00	REFLECTOR, FRONT 1	2					
9	92902–05200	WASHER	2					
10	95302–05600	NUT, HEXAGON	2					

FIG. 44 GRAPHICS

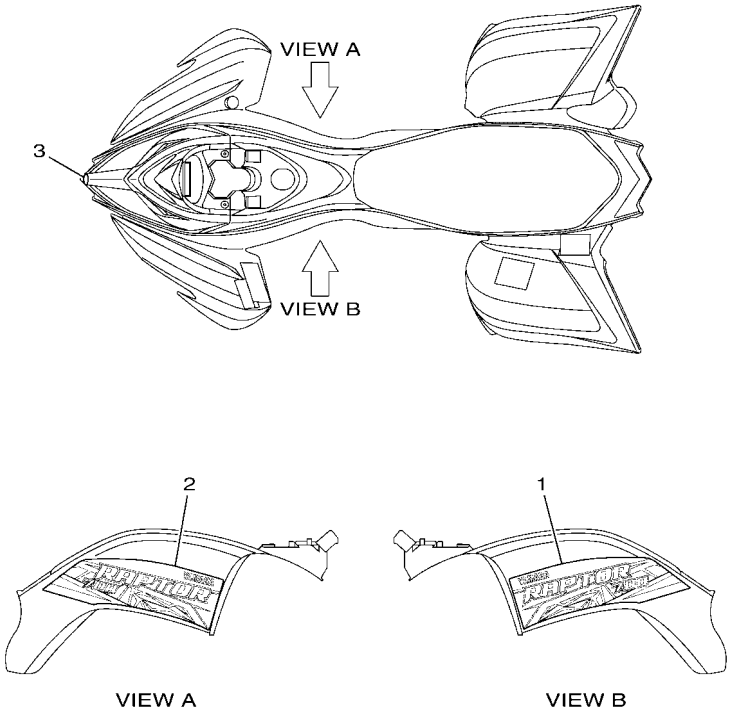

2LSL110-U440

REF. NO.	PART NO.	DESCRIPTION	2LSL					REMARKS
1	2LS–F1571–D0	GRAPHIC, FRONT FENDER 1	1					
2	2LS–F1572–D0	GRAPHIC, FRONT FENDER 2	1					
3	4KN–2836B–10	TUNING FORK MARK	1					

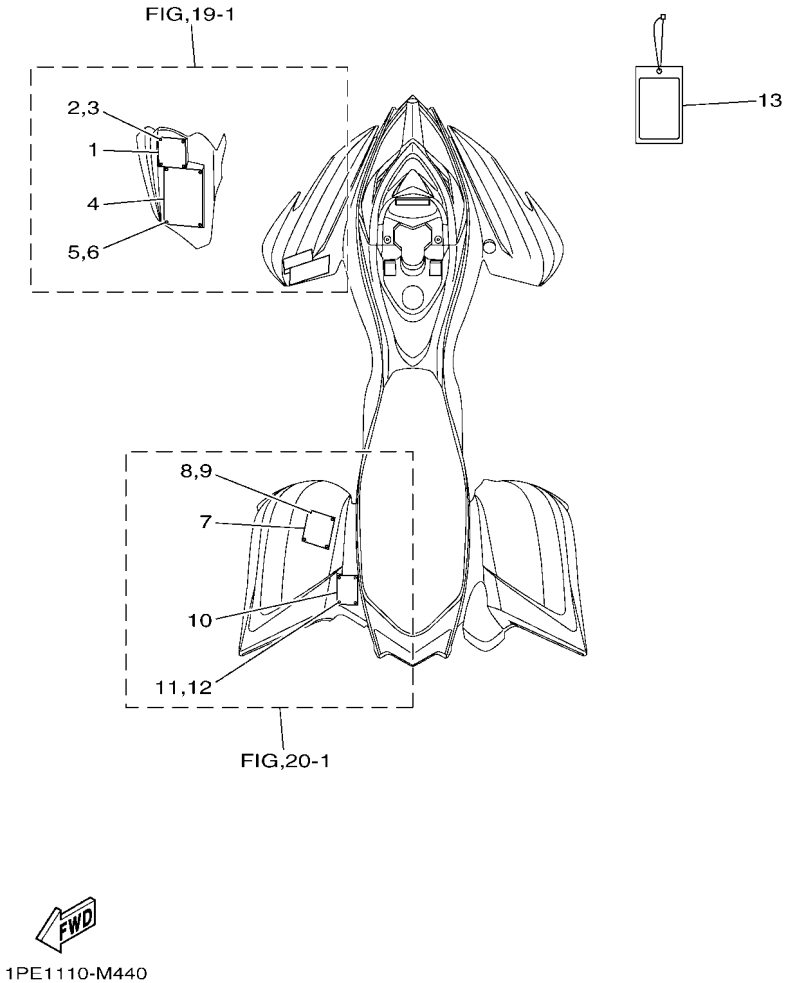

FIG. 45 EMBLEM & LABEL 1

REF. NO.	PART NO.	DESCRIPTION	2LSL					REMARKS
1	1P0–F816L–01	LABEL, WARNING AGE	1					ENGLISH
2	4XE–F1539–10	RIVET	4					
3	4XE–F1549–00	WASHER, FENDER MOLD	4					
4	4XE–F1568–00	LABEL, WARNING	1					ENGLISH
5	4XE–F1539–10	RIVET	6					
6	4XE–F1549–00	WASHER, FENDER MOLD	6					
7	1PE–F816M–U0	LABEL, WARNING TIRE & LOAD	1					
8	4XE–F1539–10	RIVET	4					
9	4XE–F1549–00	WASHER, FENDER MOLD	4					
10	3C2–F151H–00	LABEL 5	1					ENGLISH
11	4XE–F1539–10	RIVET	4					
12	4XE–F1549–00	WASHER, FENDER MOLD	4					
13	3C2–F819R–10	TAG, WARNING	1					

PART NO.	REF. NO.
2LS–11101–09	1 – 1
5VK–1111F–00	5 – 7
4G0–11133–11	1 – 2
1S3–11165–00	12 – 9
3B4–11181–00	1 – 4
1S3–11185–10	1 – 11
1S3–11186–00	1 – 14
214–11198–01	8 – 13
1S3–11310–01	2 – 1
1S3–1131E–00	1 – 17
1S3–11351–00	2 – 2
1S3–11395–00	2 – 5
2LS–11400–00	3 – 1
1S3–11401–09	3 – 2
1S3–11422–00	3 – 3
2LS–11454–00	3 – 17
2LS–11464–00	3 – 18
1S3–11531–10	3 – 16
1S3–11536–10	3 – 15
1S3–11603–10	3 – 12
2BG–11631–00	3 – 11
5VK–11633–00	3 – 13
2BG–11651–00	3 – 6
1S3–11681–00	3 – 4
5VK–12111–00	4 – 1
1S3–12113–00	4 – 3
1PE–12116–00	4 – 4
3YF–12117–01	4 – 6
4G0–12118–00	4 – 7
5H0–12119–00	4 – 5
5VK–12121–00	4 – 2
5VK–12146–00	4 – 10
5VK–12151–00	4 – 8
5XT–12159–00	4 – 11
5VK–12161–00	4 – 9
2LS–12170–00	5 – 1
1S3–12176–00	5 – 9
3TB–12210–00	5 – 16
4DW–12213–00	5 – 18
5VK–12231–00	5 – 12
1S3–12241–00	5 – 13
1S3–12280–01	5 – 4
5VK–12284–00	5 – 2
1S3–12290–00	5 – 3
5VK–12410–00	7 – 1
1S3–12413–00	7 – 2
1S3–12420–00	6 – 2
1S3–12421–00	6 – 7

PART NO.	REF. NO.
1S3–12422–00	6 – 4
1S3–12428–00	6 – 12
1S3–12436–00	6 – 1
4C8–12438–00	6 – 10
1S3–12450–00	6 – 3
5VK–12459–00	6 – 15
1S3–12465–00	7 – 18
1S3–12469–00	6 – 18
1S3–12577–00	6 – 21
583–13113–00	8 – 26
1S3–13132–00	8 – 33
1S3–13160–00	10 – 10
1S3–13171–00	8 – 22
5LP–13300–00	8 – 1
3AJ–13325–00	8 – 5
1S3–13327–00	8 – 8
5LP–13329–00	8 – 2
1S3–13356–00	8 – 7
1S3–13410–00	8 – 10
1S3–13416–00	8 – 29
4X7–13440–01	8 – 14
1S3–13447–00	8 – 15
1S3–13464–10	21 – 23
2LS–13465–10	21 – 19
1S3–13493–00	10 – 14
8FP–13556–00	10 – 3
5VK–13586–00	9 – 1
1S3–13750–10	10 – 1
5VK–13761–00	10 – 4
1S3–13907–10	26 – 19
1PE–13971–00	26 – 1
4BH–14134–00	10 – 15
3JC–14146–00	10 – 20
5PS–14147–00	10 – 5
4WV–14147–10	10 – 18
1UY–14155–00	10 – 19
1S3–14161–00	10 – 16
8CC–14216–10	10 – 9
5JW–14348–00	10 – 7
1S3–14411–00	9 – 7
1S3–14412–01	9 – 8
31A–14419–00	9 – 21
	26 – 33
5KM–14419–00	9 – 19
5TJ–14419–00	9 – 27
31A–14435–00	26 – 34
5GH–14436–00	9 – 17
1S3–14451–00	9 – 10

PART NO.	REF. NO.
2LS–14453–00	9 – 9
10M–14457–00	9 – 22
10M–14457–00	9 – 23
59V–14457–00	9 – 24
1S3–14458–00	9 – 11
1S3–14459–01	9 – 12
5VX–14503–00	10 – 13
5YP–14562–00	10 – 23
3EG–14613–00	11 – 21
2BG–1482K–00	1 – 20
1TD–14840–00	11 – 23
5JW–14889–00	1 – 22
5JW–14890–00	1 – 21
5JW–14945–00	10 – 21
1PE–15100–09	12 – 1
1S3–15113–00	13 – 10
1S3–15118–00	13 – 20
4H7–15189–00	13 – 24
4JT–15381–01	12 – 13
1S3–15383–00	12 – 11
1S3–15411–00	13 – 1
1S3–15421–00	13 – 11
1S3–15431–00	13 – 14
1S3–15441–00	13 – 18
1S3–15451–00	13 – 2
1S3–15462–00	13 – 15
1S3–1546C–00	13 – 23
1S3–15484–00	38 – 12
1S3–15515–00	14 – 1
1S3–15517–01	14 – 4
1VJ–15522–00	14 – 3
1PE–15560–00	14 – 5
5VK–15590–00	14 – 7
1S3–16111–00	15 – 1
1S3–16150–00	15 – 5
2JN–16154–00	15 – 6
5TA–16321–00	15 – 12
4X7–16325–00	15 – 11
5TG–16331–00	15 – 10
3LD–16340–01	15 – 20
132–16346–00	17 – 6
1S3–16351–00	15 – 13
4XV–16356–01	15 – 19
1S3–16371–10	15 – 7
5EB–16382–00	15 – 22
5JG–16383–00	15 – 9
5JG–16384–00	15 – 8
1S3–17121–00	16 – 10

PART NO.	REF. NO.
1S3–17131–00	16 – 5
1S3–17141–00	16 – 7
1S3–17151–00	16 – 2
1S3–17211–00	16 – 25
1S3–17221–00	16 – 15
1PE–17231–00	16 – 20
1S3–17241–00	16 – 18
1S3–17243–00	16 – 38
1S3–17251–00	16 – 23
1S3–17253–00	16 – 28
1S3–17285–00	16 – 26
1S3–17401–00	16 – 1
1S3–17402–00	16 – 13
1S3–17430–00	16 – 33
1S3–17432–00	16 – 34
1S3–17466–00	13 – 12
1S3–17471–00	16 – 42
1S3–18101–10	17 – 12
1S3–18122–01	17 – 18
1S3–18140–00	17 – 4
5JW–18144–00	17 – 5
1S3–18172–00	17 – 22
3XJ–18173–10	17 – 25
3XJ–18178–00	17 – 26
3XJ–18182–00	17 – 19
3XJ–18184–00	17 – 21
2S2–18185–00	17 – 3
5LP–18337–01	17 – 29
1S3–18380–00	17 – 28
5LP–18431–00	17 – 33
1PE–18511–00	17 – 7
1PE–18512–00	17 – 9
1PE–18513–00	17 – 10
1PE–18531–00	17 – 8
1PE–18534–00	17 – 11
1PE–18541–00	17 – 1
5VK–18699–00	17 – 17
1S3–21190–38	18 – 2
1S3–21315–10	18 – 4
1S3–21316–10	18 – 8
1S3–21317–10	18 – 9
22F–2139X–00	42 – 33
1S3–2140A–00	18 – 34
	20 – 2
1S3–21541–00	19 – 3
3B4–21541–00	19 – 5
1JK–21639–00	18 – 35
1S3–2163A–00	20 – 9

PART NO.	REF. NO.
1S3–2163E–00	20 – 10
1S3–2164F–10	20 – 18
5TG–2164G–20	20 – 20
1S3–2164H–20	20 – 19
1S3–2164J–20	20 – 21
12R–21747–00	19 – 2
1S3–21750–10	21 – 8
5LP–21761–01	21 – 9
1S3–21875–00	21 – 2
1S3–22110–00	22 – 1
4X7–22129–00	22 – 18
5YT–22129–00	22 – 39
1S3–22141–00	22 – 22
3YF–22149–00	22 – 19
1S3–22151–00	22 – 25
1S3–22153–00	22 – 53
4D3–22178–00	18 – 19
1S3–22184–00	22 – 17
1S3–22417–00	22 – 20
1S3–22475–00	22 – 13
1S3–23147–01	22 – 6
1S3–23317–00	22 – 57
1S3–23501–01	25 – 31
1S3–23502–01	25 – 32
1UY–23517–01	25 – 17
	25 – 18
5LP–23579–00	25 – 2
	25 – 5
	25 – 8
	25 – 11
8K1–23814–00	24 – 11
1PD–23831–00	24 – 3
1S3–23841–20	24 – 4
1S3–23845–20	24 – 5
5GT–23872–00	18 – 26
1UY–23894–01	24 – 17
4EW–2412F–00	26 – 6
1S3–2413X–00	26 – 30
1S3–2414H–00	26 – 17
1S3–24182–00	26 – 29
3Y0–24183–00	19 – 4
1S3–24278–00	26 – 23
1S3–24279–00	26 – 24
1S3–24452–00	26 – 25
1S3–24486–00	26 – 21
1S3–24491–10	26 – 20
2FJ–24610–10	26 – 5
5LP–25117–00	28 – 9

PART NO.	REF. NO.
1S3–25127–01	28 – 16
5TG–2514A–00	29 – 37
1PE–25311–00	22 – 2
1PE–25317–00	22 – 5
1S3–25381–10	30 – 18
1S3–25415–00	31 – 7
5TG–25438–10	30 – 15
1AS–25522–00	33 – 24
5D3–25689–00	41 – 13
1PE–25721–00	22 – 7
5TG–25726–01	41 – 14
5TG–25727–01	41 – 12
1PE–25807–00	33 – 2
1S3–2580E–00	35 – 1
1S3–2580T–01	29 – 3
1S3–2580U–01	29 – 17
5TG–2580W–21	31 – 8
1S3–25828–00	29 – 16
	29 – 30
1AE–2582A–00	35 – 3
5UG–25833–00	31 – 12
1PE–2583T–00	33 – 1
1HP–25852–00	33 – 4
3XP–25852–50	35 – 15
1HP–25854–00	33 – 3
2VN–25854–00	35 – 16
2VN–25855–00	35 – 17
1HP–2585B–00	33 – 5
2GU–25866–00	33 – 21
1HP–25867–00	33 – 7
5TG–25873–20	33 – 18
1S3–25886–00	22 – 56
1HP–25889–00	33 – 6
5JJ–25894–01	35 – 14
1HP–2589F–10	33 – 10
3SP–25914–51	31 – 21
3JD–25917–00	29 – 7
	29 – 21
	31 – 22
3JD–25919–00	29 – 8
	29 – 22
5TG–25924–00	29 – 15
	29 – 29
3JD–25926–00	29 – 12
	29 – 26
1UY–25926–51	29 – 10
	29 – 24
3SP–25926–51	31 – 23

PART NO.	REF. NO.
5DH–25933–00	31 – 19
3LD–25934–01	31 – 17
1UY–25937–51	29 – 6
	29 – 20
	31 – 20
1UY–25938–51	29 – 11
	29 – 25
3JD–25961–00	29 – 13
	29 – 27
5TG–25972–00	31 – 16
1UY–25973–51	31 – 15
1UY–25974–51	31 – 14
5TG–25975–00	31 – 11
5TG–25977–50	31 – 25
5TG–25978–00	31 – 13
1S3–26113–00	32 – 26
1NV–26129–00	32 – 13
1S3–26150–10	32 – 24
1S3–26250–00	32 – 4
1UY–26259–00	33 – 16
1NV–26259–01	32 – 10
1S3–2625G–00	32 – 14
1NV–2625K–00	32 – 11
1S3–2628F–00	32 – 5
1S3–2628G–00	32 – 6
1S3–26292–00	35 – 18
1NV–26304–00	32 – 9
1S3–26311–11	32 – 22
1HP–26332–00	33 – 8
1S3–26335–01	32 – 23
1PE–26341–00	32 – 32
31A–26372–00	32 – 31
1S3–2637E–11	32 – 25
1NV–26398–00	32 – 8
4SS–27218–00	35 – 8
2YK–27222–00	35 – 9
4HC–27415–00	42 – 32
1S3–27453–01	35 – 24
1NV–2811A–01	18 – 37
2LS–2830X–00	42 – 6
4KN–2836B–10	44 – 3
4D9–81168–00	42 – 17
1S3–81410–00	37 – 1
2LS–81450–00	37 – 2
5KM–81677–00	33 – 25
3AJ–81801–00	38 – 2
3KS–81809–00	38 – 5
1S3–81815–01	38 – 8

PART NO.	REF. NO.
3AJ–81826–00	38 – 7
4XV–8182A–00	38 – 10
11H–81844–00	38 – 6
1FK–81847–00	38 – 3
4NK–81850–00	38 – 4
4G0–81871–00	38 – 9
1S3–81890–00	38 – 1
5UG–81940–00	42 – 39
1TP–81950–00	42 – 52
5DM–81950–00	42 – 53
5BN–81960–00	42 – 20
3WP–81980–00	42 – 50
5TG–82121–10	42 – 34
1S3–82123–00	42 – 30
116–82131–00	18 – 38
1AE–82151–00	42 – 40
5JJ–82151–20	42 – 48
5JJ–82151–30	42 – 49
3D5–82180–00	42 – 46
3TB–82310–00	42 – 8
5VK–82370–00	42 – 10
1C7–82380–00	10 – 6
4SH–82510–00	42 – 42
1S3–82530–10	42 – 51
3GB–82540–01	42 – 12
5LP–82540–01	42 – 11
1S3–82541–00	42 – 38
3D5–82560–00	42 – 47
3HN–82569–00	42 – 44
5PS–82576–01	42 – 54
3HN–82579–00	42 – 43
2LS–82590–00	42 – 45
5YT–82910–11	41 – 2
5YT–82911–10	41 – 3
1S3–82913–00	32 – 18
5TG–82913–00	41 – 7
5KM–82917–00	41 – 9
1S3–83530–01	42 – 65
1S3–83755–01	42 – 16
2HT–83912–01	41 – 4
1PE–83922–00	33 – 12
5TG–83923–00	41 – 15
437–83936–01	32 – 21
1S3–83973–11	41 – 1
1HP–83980–01	33 – 13
5TG–84110–03	39 – 2
5TG–84140–01	39 – 4
5TG–84165–01	39 – 3

PART NO.	REF. NO.
5TG–84166–01	39 – 8
5TG–84310–03	39 – 7
5TG–84310–03	39 – 1
	39 – 6
5TG–84340–01	39 – 9
1S3–84710–10	40 – 1
1S3–84736–00	40 – 9
2EK–85111–00	43 – 8
3Y6–85130–02	43 – 1
449–85131–02	43 – 4
1S3–85370–00	42 – 60
5YP–85790–00	42 – 14
8GL–85885–00	10 – 2
5VU–85886–00	9 – 18
2LS–8591A–10	42 – 1
2LS–E1166–00	12 – 7
1PE–E2405–00	7 – 11
1PE–E243A–00	10 – 24
1PE–E243E–00	10 – 25
1PE–E2460–01	7 – 10
1XD–E2462–00	7 – 14
1PE–E2467–00	19 – 21
1PE–E2535–00	7 – 12
1PE–E2578–00	7 – 8
1PE–E2579–00	7 – 15
1PE–E2675–00	7 – 13
1PE–E3545–00	9 – 4
2LS–E4611–00	11 – 1
2LS–E4628–00	11 – 2
2LS–E4710–00	11 – 6
2LS–E4714–00	11 – 10
2LS–E4728–00	11 – 13
2BG–E4755–00	11 – 8
2LS–E4780–00	11 – 7
1TD–E4787–00	11 – 11
2LS–E4881–00	11 – 22
2LS–E4882–00	11 – 24
1PE–E8110–00	17 – 35
1PE–E8113–00	17 – 36
2LS–F1101–29	18 – 1
2LS–F1274–00	42 – 3
5B4–F1338–00	18 – 31
1PE–F1471–00	18 – 16
1PE–F1500–K0	19 – 1
1PE–F1513–01	19 – 12
1PE–F1514–01	19 – 13
3C2–F151H–00	45 – 10
4XE–F1539–10	45 – 2

PART NO.	REF. NO.
4XE–F1539–10	45 – 5
	45 – 8
	45 – 11
4XE–F1549–00	45 – 3
	45 – 6
	45 – 9
	45 – 12
4XE–F1568–00	45 – 4
2LS–F1571–D0	44 – 1
2LS–F1572–D0	44 – 2
2LS–F1600–00	20 – 1
1PE–F1621–00	20 – 11
1PE–F1643–00	20 – 29
1PE–F1644–00	20 – 31
1PE–F1691–00	20 – 12
1PE–F171A–60	19 – 18
1PE–F1871–00	21 – 1
1PE–F217A–00	22 – 27
1PE–F217F–00	22 – 37
1PE–F219X–00	22 – 51
2LS–F2200–00	23 – 1
1PE–F3390–00	25 – 27
1PE–F3391–60	19 – 15
2LS–F3540–00	25 – 7
2LS–F3550–00	25 – 10
1PE–F3570–60	25 – 1
1PE–F3580–60	25 – 4
37S–F3812–00	24 – 13
1PE–F3813–00	24 – 1
1PE–F3816–00	24 – 2
1PE–F3868–00	24 – 15
1PE–F4110–00	26 – 4
1PE–F416F–00	26 – 18
1PE–F4710–20	27 – 1
1PE–F4723–00	27 – 4
2LS–F4731–00	27 – 2
1PE–F4737–00	27 – 5
4XE–F4747–00	27 – 3
1PE–F510D–00	28 – 7
1TD–F5180–11	28 – 1
	28 – 4
1PE–F5386–00	30 – 14
1TD–F5390–11	30 – 1
	30 – 4
1PE–F53K0–00	30 – 7
1PE–F5712–00	31 – 1
4XE–F582T–11	29 – 1
1PE–F582W–00	31 – 2

PART NO.	REF. NO.
1PE–F5871–00	33 – 19
1PE–F5872–00	33 – 17
1PE–F5874–00	35 – 26
2LS–F5875–00	25 – 36
2LS–F5876–00	25 – 37
1PE–F5895–00	35 – 21
1PE–F6111–00	32 – 1
1PE–F6124–00	32 – 3
5FU–F6241–10	32 – 2
1PE–F7211–00	34 – 1
1PE–F7411–00	34 – 5
1PE–F7421–00	34 – 8
1PE–F8100–01	18 – 36
1P0–F816L–01	45 – 1
1PE–F816M–U0	45 – 7
1P0–F8186–01	18 – 39
3C2–F819R–10	45 – 13
1PE–F845N–00	36 – 1
2LS–F845R–11	36 – 3
1PE–H2100–00	42 – 22
1PE–H2115–00	42 – 36
1PE–H2116–00	42 – 37
1PE–H2128–00	42 – 28
1PE–H2129–00	42 – 31
1PE–H212B–00	42 – 23
1PE–H4703–01	40 – 10
1PE–H4716–00	40 – 4
2LS–H5112–00	43 – 7
1S3–W0042–50	35 – 2
1S3–W0045–00	29 – 14
1S3–W0045–10	29 – 28
5TG–W0046–10	31 – 18
5TG–W0047–00	31 – 10
3LC–W0047–50	29 – 5
	29 – 19
1UY–W0048–50	29 – 9
	29 – 23
	31 – 24
5TG–W0057–00	29 – 4
	29 – 18
5TG–W0057–10	31 – 9
90101–06664	17 – 27
90105–06078	5 – 8
90105–06080	20 – 5
90105–06081	12 – 10
90105–06082	8 – 11
	12 – 12
90105–06084	9 – 29

PART NO.	REF. NO.
90105–06084	19 – 23
	20 – 3
	42 – 24
90105–06142	17 – 37
90105–07006	5 – 5
	5 – 10
90105–08142	11 – 18
	18 – 5
	18 – 10
	36 – 4
90105–08184	29 – 31
90105–10131	25 – 28
90105–10132	25 – 20
90105–10135	25 – 19
90105–10294	34 – 6
	34 – 9
90105–10405	31 – 26
90105–12038	23 – 2
90109–06169	8 – 18
90109–06172	18 – 18
	19 – 6
	22 – 26
90109–06199	22 – 52
90109–06201	18 – 17
90109–06214	19 – 14
90109–06241	33 – 26
90109–06264	25 – 38
90109–06798	41 – 5
90109–08076	31 – 3
90109–08082	29 – 2
90109–08100	36 – 2
90109–09002	1 – 6
90109–09003	1 – 5
90109–09005	1 – 7
90109–10013	30 – 16
90109–10018	22 – 31
90109–10019	23 – 6
90109–10020	22 – 42
90109–12009	22 – 46
90110–05030	8 – 9
90110–05031	13 – 9
	37 – 4
90110–06175	1 – 23
90110–06182	13 – 21
90110–12001	22 – 9
90111–06137	19 – 8
90111–06814	19 – 16
	20 – 7

PART NO.	REF. NO.
90113–06055	31 – 6
90114–10006	28 – 8
90114–10020	30 – 8
90119–06137	35 – 19
90119–06152	21 – 5
90119–10023	2 – 3
90122–06010	9 – 14
90123–08046	41 – 10
90149–04278	32 – 15
90149–05018	8 – 20
90149–06074	12 – 14
90149–06117	29 – 38
90149–06298	11 – 12
90149–08049	14 – 8
90149–10034	18 – 3
90151–06005	26 – 7
90154–05043	20 – 13
90159–06029	15 – 16
90170–06128	4 – 12
90170–12054	24 – 7
90170–12055	24 – 6
90170–16326	3 – 23
90170–20274	15 – 4
90171–10001	24 – 8
	24 – 22
	25 – 34
90171–14002	29 – 35
90171–16002	30 – 12
90179–08148	41 – 11
90179–08674	18 – 11
90179–16004	3 – 9
90179–20007	15 – 18
90179–22011	16 – 47
90179–36003	31 – 4
90183–06053	19 – 17
90185–10011	18 – 7
	18 – 13
	18 – 15
	30 – 17
90185–10012	22 – 36
	22 – 44
	23 – 8
	25 – 23
	25 – 24
	25 – 29
90185–12007	22 – 50
	23 – 5
90185–14009	24 – 20

PART NO.	REF. NO.
90185–16002	22 – 24
90201–04027	22 – 55
90201–04028	9 – 16
90201–04030	42 – 57
90201–05017	11 – 15
90201–05019	11 – 4
90201–05025	40 – 3
90201–05037	11 – 5
90201–06033	26 – 13
90201–06076	20 – 17
90201–06090	26 – 10
90201–063F3	22 – 33
90201–08048	11 – 19
90201–08053	18 – 20
	20 – 25
90201–08083	35 – 12
90201–082A6	21 – 12
90201–10034	22 – 35
90201–10035	22 – 43
	25 – 30
90201–10036	23 – 7
90201–10037	25 – 21
	25 – 22
90201–10118	33 – 23
	35 – 28
90201–10614	15 – 28
90201–12030	22 – 34
90201–12032	22 – 49
	23 – 4
90201–12040	17 – 16
90201–12541	6 – 11
90201–12575	17 – 31
90201–14021	24 – 19
90201–152P4	16 – 36
90201–16013	3 – 8
90201–16018	22 – 23
90201–16023	30 – 11
90201–177G4	17 – 15
90201–20022	29 – 33
90201–20276	16 – 29
90201–266F6	34 – 3
90201–286K9	14 – 2
90208–20001	15 – 17
90208–37001	31 – 5
90209–06096	9 – 13
90209–10229	24 – 9
	24 – 23
	25 – 33

PART NO.	REF. NO.
90209–22008	16 – 3
90209–26008	16 – 16
90209–26008	16 – 9
90214–22003	16 – 8
90214–26002	16 – 21
90214–26003	16 – 22
90215–16221	3 – 24
90215–20006	15 – 3
90215–25003	16 – 46
90240–08005	35 – 11
90252–03001	30 – 13
90267–47187	22 – 54
90267–48138	9 – 15
90269–05055	26 – 31
90269–06002	19 – 20
	19 – 22
	42 – 35
90269–07011	26 – 28
90280–05001	3 – 7
90282–05005	3 – 22
90282–07003	15 – 2
90338–05008	26 – 26
90338–07007	41 – 17
	42 – 5
90338–18266	9 – 20
90338–20183	18 – 29
90338–23004	18 – 30
	22 – 21
90338–24260	18 – 28
90338–26004	18 – 27
90340–14016	13 – 5
90340–14029	8 – 12
90340–36004	13 – 7
90380–08136	18 – 21
90380–10002	14 – 6
90380–22111	22 – 15
90381–15088	25 – 13
	25 – 14
90383–20032	22 – 28
	22 – 38
90387–06098	26 – 14
90387–06136	19 – 10
	39 – 11
90387–06146	19 – 24
90387–06153	20 – 4
	20 – 6
	40 – 6
	42 – 26

PART NO.	REF. NO.
90387–06166	7 – 19
90387–06204	20 – 23
90387–06205	21 – 14
90387–063E6	42 – 27
90387–06M17	26 – 9
90387–08073	9 – 30
90387–090R0	24 – 18
90387–100Y6	25 – 16
90387–101R3	25 – 15
90387–12010	22 – 40
	22 – 45
90387–12021	22 – 30
90387–12028	22 – 48
	23 – 3
90387–1504G	16 – 37
90387–150R1	29 – 34
90387–16014	22 – 8
90387–17009	12 – 3
90387–20005	29 – 32
90387–20021	16 – 27
90387–22006	16 – 6
90387–26004	16 – 24
90387–26005	16 – 19
90387–28008	16 – 14
90387–28009	16 – 41
90401–08004	1 – 18
90401–10015	33 – 22
	35 – 27
90401–10024	8 – 23
90430–05126	8 – 21
90430–06014	6 – 13
	7 – 3
90430–08119	1 – 19
90430–10148	42 – 13
90430–10188	8 – 24
90430–12202	42 – 15
90430–14043	8 – 34
90445–083J4	26 – 16
90445–09777	21 – 4
90445–09M30	21 – 3
90445–11034	21 – 18
90445–16007	26 – 32
90450–22017	21 – 22
90450–32015	6 – 22
	6 – 25
	7 – 16
90450–59006	9 – 28
90450–72003	9 – 2

PART NO.	REF. NO.
90450–72003	9 – 3
90460–75020	9 – 26
90461–10004	42 – 19
90461–10011	13 – 22
	16 – 43
90462–08046	13 – 26
90464–12045	18 – 33
	32 – 30
	42 – 58
90464–13073	32 – 29
90464–14004	26 – 2
90464–15011	42 – 62
90464–15157	40 – 8
90464–20213	18 – 32
90464–23041	21 – 7
90464–40825	42 – 64
90464–66001	26 – 27
90465–13M11	42 – 59
	42 – 63
90467–08003	21 – 6
90467–09006	10 – 22
90467–100A1	21 – 17
90467–11044	35 – 22
90467–11090	10 – 26
	10 – 27
90467–13062	6 – 17
90467–14057	35 – 23
90467–140A4	12 – 8
90467–15012	9 – 6
90467–160A4	9 – 5
90467–17089	11 – 25
90467–220A1	9 – 25
90467–26189	7 – 9
90480–01017	26 – 8
90480–11224	42 – 4
90480–13459	21 – 13
90480–14101	40 – 7
90480–14102	19 – 9
	39 – 5
	39 – 10
90480–15009	35 – 20
90480–17011	26 – 3
90480–18005	26 – 12
90480–18330	7 – 17
90480–24004	21 – 16
90501–043E0	8 – 28
90501–052G5	17 – 20
90501–230E4	15 – 15

PART NO.	REF. NO.
90506–20026	34 – 4
90508–18018	15 – 21
90508–35007	17 – 13
90520–20001	19 – 19
90560–06201	20 – 15
91312–04006	10 – 17
91312–04025	42 – 55
91312–06012	8 – 25
91312–06016	21 – 25
	42 – 18
91312–06020	6 – 19
91312–06025	5 – 17
	13 – 13
91312–06030	1 – 8
91312–06035	8 – 4
91312–06040	2 – 4
91312–06095	8 – 19
91314–08035	11 – 17
91314–08040	22 – 11
91401–16012	35 – 13
91402–20020	24 – 10
	24 – 24
	25 – 35
91402–20025	24 – 21
91402–30025	29 – 36
92012–06010	42 – 2
92012–06014	41 – 16
92012–06016	41 – 18
92012–06025	20 – 14
92012–06030	37 – 3
92012–08016	20 – 32
	35 – 25
92012–08020	20 – 30
92012–08035	20 – 33
	35 – 10
92902–04600	33 – 15
92902–05100	32 – 20
	43 – 6
92902–05200	43 – 2
	43 – 5
	43 – 9
92902–05600	32 – 28
92902–06200	11 – 16
92902–06600	5 – 15
92902–08600	15 – 23
92902–10200	28 – 15
	30 – 10
92903–08600	22 – 12

PART NO.	REF. NO.
92906–04100	35 – 6
92906–04600	35 – 7
93101–12173	6 – 9
93101–14164	13 – 19
93101–25106	3 – 21
93102–12106	17 – 34
93102–12224	17 – 24
93102–15212	15 – 26
93102–22216	28 – 13
93102–25081	18 – 24
93102–25099	18 – 25
93102–35393	16 – 40
93104–09025	32 – 12
93105–26026	28 – 12
93106–22019	22 – 16
93106–46003	22 – 4
93109–20076	22 – 29
93112–31800	24 – 14
93210–07135	8 – 17
	12 – 16
93210–10197	8 – 30
	21 – 20
93210–13361	8 – 3
93210–14369	13 – 6
93210–15620	35 – 4
93210–16629	21 – 24
93210–207A0	13 – 25
93210–21190	21 – 10
93210–25001	16 – 39
93210–33786	6 – 20
93210–357A3	13 – 8
93210–36769	30 – 19
93210–41042	7 – 7
93210–61750	6 – 5
93210–64297	8 – 16
93210–78544	1 – 15
93210–96601	1 – 12
93304–20812	22 – 3
93306–00106	6 – 6
93306–00304	15 – 14
93306–00415	16 – 31
93306–00431	16 – 12
93306–00446	28 – 10
93306–00502	3 – 20
93306–07209	5 – 6
93306–20231	28 – 11
93306–20352	18 – 23
93306–20481	3 – 19

PART NO.	REF. NO.
93306–20501	16 – 11
93306–27803	16 – 32
93306–30810	3 – 10
93306–90509	17 – 2
93310–84037	3 – 5
93315–31502	15 – 27
93317–11096	15 – 25
93317–22237	22 – 14
93410–67085	22 – 10
93430–23054	34 – 2
93440–15012	16 – 35
93440–25084	16 – 4
93440–28062	16 – 17
93450–24154	3 – 14
93503–08007	8 – 27
93603–16219	6 – 14
93608–30002	17 – 23
93612–16254	1 – 10
93700–06004	22 – 32
	22 – 41
	22 – 47
	25 – 25
	25 – 26
9383G–14231	16 – 45
93900–00813	28 – 3
	28 – 6
	30 – 3
	30 – 6
94107–10803	28 – 2
	28 – 5
94110–09801	30 – 2
	30 – 5
94568–H6098	30 – 20
94591–57126	5 – 11
94701–00330	1 – 9
95022–06008	42 – 41
95022–06010	7 – 4
95022–06012	11 – 9
	22 – 58
95022–06016	21 – 21
95022–06020	1 – 13
	1 – 16
	7 – 5
95022–06025	6 – 8
	8 – 32
95022–06030	12 – 4
	13 – 4
	13 – 17

PART NO.	REF. NO.
95022–06045	7 – 6
95022–06050	6 – 23
95022–06050	12 – 5
95022–06090	12 – 6
95022–06110	6 – 24
95302–05600	43 – 3
	43 – 10
95302–05700	32 – 16
95302–06800	26 – 22
95602–05100	32 – 7
95602–06100	41 – 6
95602–06200	19 – 7
	20 – 8
	20 – 16
	20 – 24
95602–08200	20 – 27
95612–08625	1 – 3
95702–04500	42 – 56
95702–06500	33 – 11
95702–08500	11 – 20
95702–10500	28 – 14
	30 – 9
95802–06010	40 – 5
	40 – 11
95802–06020	42 – 29
95802–06030	7 – 20
	42 – 25
95802–06035	26 – 11
	26 – 15
95812–06010	42 – 61
95812–06012	17 – 30
95812–06016	42 – 7
95812–06020	21 – 15
95812–06025	19 – 11
	20 – 22
	39 – 12
	42 – 21
95812–06030	38 – 11
95812–08016	21 – 11
95812–08045	18 – 22
95812–10030	34 – 7
95812–10055	18 – 6
95812–10090	18 – 14
95812–10110	18 – 12
95822–06012	2 – 6
95822–06025	33 – 20
95822–08016	20 – 28
95822–08020	20 – 26

PART NO.	REF. NO.
95822–08030	24 – 12
97002–05016	41 – 8
97002–05020	42 – 9
97022–06014	16 – 44
97022–06016	5 – 14
97022–08060	24 – 16
97702–50016	40 – 2
98502–04012	33 – 14
98502–05018	32 – 27
98502–05020	32 – 17
	32 – 19
98506–04012	35 – 5
98507–05012	10 – 12
98507–06010	10 – 8
98507–06012	10 – 11
98780–04012	33 – 9
98902–06010	11 – 14
98980–06010	11 – 3
99001–07600	15 – 24
99002–10600	17 – 32
99009–10400	15 – 29
99009–11400	8 – 6
99009–12400	6 – 16
99009–17400	17 – 14
99009–20400	16 – 30
99009–30400	25 – 3
	25 – 6
	25 – 9
	25 – 12
99530–08016	12 – 15
99530–10114	8 – 31
	12 – 2
	13 – 3
99530–10120	13 – 16
99530–14016	12 – 17

PART NO.	REF. NO.

PART NO.	REF. NO.